STATEMENT OF BASIS

Applicant:	LAC Minerals (USA) LLC – Richmond Hill Reclamation Project
Permit Number:	SD0026883
Contact Person:	Mark Tieszen, Environmental Manager Jeff Burich, Closure Manager 11457 Bobtail Gulch Street Central City, SD 57754
Phone:	(605) 722-4796 (605) 722-4680
Permit Type:	Major Industrial - Renewal

This document is intended to explain the basis for the requirements contained in the draft Surface Water Discharge Permit. This document provides guidance to aid in complying with the permit requirements. This guidance is not a substitute for reading the draft permit and understanding its requirements.

DESCRIPTION

LAC Minerals (USA) LLC operated an open pit gold mine, referred to as the Richmond Hill mine, located about four miles northwest of Lead, South Dakota, in Sections 14, 15, 22, and 23, Township 5 North, Range 2 East, in Lawrence County (Latitude 44.379972°, Longitude -103.855802°, Satellite Map Interpolation). LAC Minerals operated at the site from 1988-1995. LAC Minerals has ceased mining at Richmond Hill and reclamation of the site has been largely completed. Mining had taken place in this area since the late 1800's. See Figure 1.

Figure 1: LAC Minerals

LAC Minerals recovered gold and silver at this site through a process known as heap leaching. The ore was crushed and loaded onto three leach pads. The ore was then leached with a weak sodium cyanide solution to dissolve the gold and silver out of the ore. The gold- and silver-bearing solution was processed by passing the solution through a series of carbon columns. Gold and silver from the solution adsorbed onto the activated carbon. The gold was then stripped from the columns and recovered through an electrolytic process. LAC Minerals neutralized the spent ore remaining on the leach pads and reclaimed the spent ore in place. A clay cap has been placed over the leach pads. A small amount of flow continues to be discharged from these pads to the underdrain system that directs the wastewater to the Richmond Hill water treatment plant.

There was a waste rock facility in Spruce Gulch, which has been reclaimed. This rock facility began generating acid as a result of mining the sulfide minerals at the Richmond Hill mine site. In response to the acid mine drainage, LAC Minerals removed the rock facility and placed this material in a pit impoundment. This impoundment has been capped and LAC Minerals continues to monitor the effectiveness of this reclamation effort. To date, the reclamation has been effective.

The process ponds were converted into water treatment and storage ponds and the process plant was converted into a water treatment plant. These water treatment facilities and associated ancillary facilities will be reclaimed when active treatment of leach pad effluent is no longer necessary.

Numerous historic mining shafts, pits, and lode claims occur in the Black Hills in the vicinity of Richmond Hill. Cleopatra Creek receives stormwater runoff from the Wharf Resources mine (Surface Water Discharge Permit SD0025852), located upstream of Richmond Hill, as well as receiving flow from LAC Minerals' site. There are three intermittent tributaries to Cleopatra Creek that receive flow from LAC Minerals: Spruce Gulch, West Gulch, and North Gulch. These tributaries each flow about ¼ mile before entering Cleopatra Creek.

Cole Creek, another tributary of Cleopatra Creek, receives stormwater runoff from the LAC Minerals' site. In addition, some stormwater runoff from haul roads and office buildings may enter Chism Gulch, a tributary of Burno Gulch, and Columbia Dam Creek. Burno Gulch and Columbia Dam Creek are tributaries to False Bottom Creek. Stormwater discharges to West Gulch, North Gulch, Cole Creek, Chism Gulch, and Columbia Dam Creek are allowed through the draft permit and do not have any effluent monitoring requirements for discharges of this nature. The stormwater discharges will be required to comply with the effluent limits in the draft permit.

The Richmond Hill treatment system (including the reverse osmosis (RO) plant, biological treatment plant, feed pond, sludge pond, storage pond, sediment pond, blend tank, FD-1 pump back system and other components) is located above the headwaters of Rubicon Gulch, a tributary of Spearfish Creek. Bridal Veil Falls, a scenic waterfall, is located at the mouth of Rubicon Gulch just above the confluence with Spearfish Creek.

The current permit uses a unique approach to compliance, establishing instream points where LAC Minerals must comply with the permit limits, in addition to end-of-pipe outfalls. In 1993, the United States Environmental Protection Agency (USEPA) established guidance for permitting discharges from hard rock mines. In this guidance, USEPA stated:

> *We found some mines had seeps or other ground water discharge to surface water which were not authorized in the facility's NPDES [National Pollutant Discharge Elimination System] permit. There were also some mines without an NPDES permit which had claimed to be "non-discharging". However, upon inspection, these facilities were found to be discharging through seeps and water control structures. These facilities are now being required to obtain NPDES permits covering all outfalls including ground water discharge determined to be hydrologically connected to surface water.*

In 2020, the United States Supreme Court issued its decision in the *County of Maui v. Hawai'i Wildlife Fund* (the Maui Decision). The court found that point source discharges to navigable waters through groundwater are regulated under the Clean Water Act. In the Maui Decision, the court held that the Clean Water Act *require[s] a permit if the addition of the pollutants through groundwater is the functional equivalent of a direct discharge from the point source into navigable waters*.

In the 1993 guidance, USEPA also discussed the applicability of stormwater discharges associated with mining activity versus "traditional" NPDES requirements for technology-based effluent limits and water quality-based effluent limits[1]. Dry weather flows from mine adits, seeps, French drains, and culverts are mine drainage or process wastewaters and are subject to the federal effluent guidelines found in Title 40 of the Code of Federal Regulations, Part 440 (40 CFR Part 440) – Effluent Guidelines for Ore Mining and Dressing. During wet weather flows, most of the areas at an active mine must also be covered under a traditional permit because stormwater was included in developing the effluent guidelines at 40 CFR Part 440. Only wet weather surface runoff from certain ancillary areas of active mines and inactive areas would fall under the stormwater permitting program if they do not combine with mine drainage or process wastewater.

Compliance points were established in prior permits to monitor the combined flows of mine drainage, stormwater, treated neutralization water, and springs. Since LAC Minerals has ceased mining the site and is actively reclaiming the site, the water that LAC Minerals is discharging is considered stormwater, in accordance with USEPA's 1993 memo. Partially reclaimed areas or areas not released from reclamation bonds are considered stormwater discharges. These discharges are not subject to the federal effluent guidelines in 40 CFR Part 440. However, LAC's discharges are subject to the South Dakota surface water quality standards. The treatment processes have been employed as best management practices to minimize the pollutants present in the stormwater discharges from this site.

The surface and ground water are hydrologically connected at this site, resulting in discharges of pollutants through the ground water. In accordance with the Maui decision, any discharges to surface waters through ground water will be included in this permit as well. Therefore, the draft permit will continue to employ the compliance points for discrete discharges to ensure all discharges from the site are appropriately authorized:

---

[1] In 1993, the USEPA delegated NPDES permitting authority to the state of South Dakota. In South Dakota, these state-issued NPDES permits are referred to as Surface Water Discharge permits and are the functional equivalent of an NPDES permit.

- Compliance Point 001 in Spruce Gulch will be continued in the draft permit, with monitoring and effluent limits.
- Compliance Points 002 (West Gulch) and 003 (North Gulch) shall be removed from the draft permit. In accordance with the 1993 memo, these sites will be regulated as stormwater discharges, requiring the development and implementation of a stormwater pollution prevention plan. Effluent limits and monitoring are no longer necessary.
- Compliance Point 004 in Rubicon Gulch will be continued in the draft permit, with monitoring and effluent limits.
- The sites that are identified as solely stormwater discharges in the current permit require the development and implementation of a stormwater pollution prevention plan. This approach will be continued in the draft permit.

As stated above, LAC Minerals is in the process of reclaiming the Richmond Hill mine site. Once reclamation is complete and LAC Minerals has been released from its mining reclamation bond, the site will no longer be considered a point source. At that time, a Surface Water Discharge permit will not be required. However, since the reclamation is not complete at this site, the compliance points and monitoring requirements will be continued in the draft permit. The current permit requires LAC Minerals to quantify its contribution to Cleopatra Creek by monitoring upstream and downstream of the Richmond Hill property.

Figure 2: LAC Minerals Facility Map

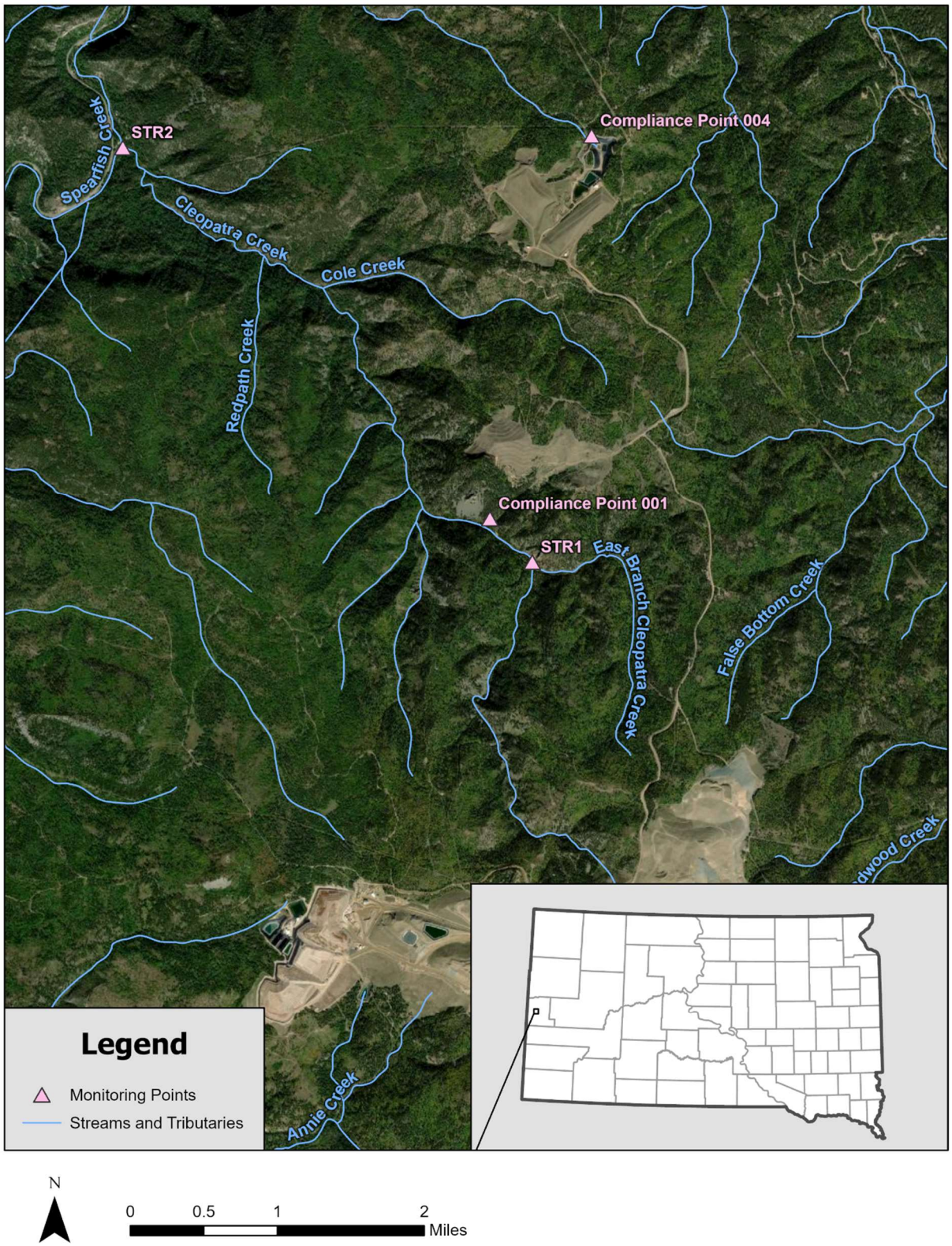

LAC Water Management and Treatment Facilities Description

Spruce Gulch Water Treatment (Compliance Point 001)
LAC Minerals operates a caustic soda treatment system in upper Spruce Gulch to treat the stormwater runoff from the reclaimed waste rock facility and water collected and piped from South Gulch. The Spruce Gulch treatment system includes the lined Spruce Gulch treatment pond and a downgradient unlined retention pond. Caustic is added as needed to the Spruce Gulch treatment pond to raise the pH of the water, allowing the metals to precipitate. This sludge is disposed of onsite. The treated stormwater is discharged to Spruce Gulch and monitored at Compliance Point 001. The compliance point shall be continued in the permit renewal as it a more representative and will capture other stormwater and potential seepage than an of pipe limit at implemented at the treatment facility. A schematic of the Spruce Gulch water management flows is attached in Attachment 4.

West Gulch and North Gulch
LAC Minerals has implemented best management practices in the West Gulch (former Compliance Point 002) and North Gulch (former Compliance Point 003) drainages to minimize any pollutants in the stormwater discharge from these areas of the Richmond Hill Mine. LAC Minerals will be required to implement its stormwater pollution prevention plan to minimize the pollutants present in the stormwater runoff to the extent practicable. There is no longer mine drainage or process wastewater discharged at these points. These compliance points have been removed from the draft permit.

Richmond Hill Water Treatment System – Main Plant at Rubicon Gulch (Compliance Point 004)
LAC Minerals has closed and fully reclaimed the leach pads on-site. The leach pads have a leak detection system and collection layer. The pads are capped, but effluent is discharged from these pads that must be captured and treated. The effluent is routed to the feed pond for the Richmond Hill water treatment system. The water from the feed pond is either routed to a 78-million-gallon storage pond onsite or is directed to the water treatment system. The storage pond also receives stormwater runoff from this area (this pond was referred to as a stormwater pond in the current permit).

As described below, the flows from the feed pond are treated in one of three ways (in addition to the passive treatment ongoing in the various onsite ponds) as required to meet permit limits at Compliance Point 004. The nature and extent of water treatment and extent of pump back from French Drain 1 (FD-1) prior to discharge at Compliance Point 004 varies depending on weather, water balance and other conditions. LAC and efficiently and effectively manage their water balance using compliance points.

Treatment Scenario 1 Operates During the Summer Months

1. During the summer months, a coagulant is added to the water from the feed pond prior to filtration in the multimedia filtration tanks. The water then flows through the 30-micron, the 5-micron, and the 1-micron cartridge filters. Following the filtration, an antiscalant is added and the flow is pumped to an RO treatment unit.

Following RO, the treated permeate is directed to a blend tank. A portion of the concentrate removed by the RO unit is diverted to the sludge pond. The remaining concentrate is sent to the biological treatment system (bioreactors) for selenium removal. The water is heated as necessary. Molasses and nutrients are added to improve the treatment process. The water flows to two anaerobic bioreactors in series, followed by a fine-bubble water column and an aerobic bioreactor. After treatment in the aerobic unit, the treated concentrate flow is sent through polishing filters and then to the blend tank.

Treatment scenarios 2 and 3 are operated interchangeably during the winter months as required to ensure effective treatment and to maintain a proper water balance at the site. The RO unit is not operated in the winter because it cannot operate effectively without temperature control.

2. With treatment scenario 2, water is pumped from the feed pond and conveyed directly into the biological treatment system described above in scenario 1, bypassing the RO unit. After treatment, the water flows to the blend tank.

3. With treatment scenario 3, water is pumped to the two anaerobic reactors, followed by the fine-bubble water column, and the aerobic bioreactor. The water flows to a mix tank where citric acid and Nalmet 1691 (a reagent) is added to further reduce selenium concentrations in the biological treatment plant effluent. The chemical precipitate step is added as needed (typically during low flows) depending on the quality of flows within the Rubicon Gulch treatment system.

Following one of these scenarios, flows are managed through a blend tank and an onsite sediment pond upstream of Rubicon Gulch and Compliance Point 004. Before Compliance Point 004, the treated water is transferred to a pond which has a surface aeration unit to further treat the water. pH and conductivity meters are installed before Compliance Point 004 to ensure permit compliance before allowing water to discharge. If parameters are believed to be above permit limits, LAC has the option of returning the water back to the feed pond or storage pond to undergo further treatment.

Solids removed from the multimedia filters, the anaerobic units, the fine bubble water column, the aerobic unit, and the polishing filter are directed to the sludge pond also. The decant from the sludge pond is routed to the feed and through the treatment system.

Two French drain systems have been installed to divert springs within the former process area. One French drain system (FD-1) is under the onsite ponds and the other is under leach pad #3 (FD-2). These flows are also discharged to Rubicon Gulch. The larger spring flows from FD-1 are monitored and can be managed internally (pumped back to the Feed Pond) as necessary to ensure flows that are conveyed to Compliance Point 004 meet effluent limits. The smaller spring flows from FD-2 are managed onsite in the Sediment Pond.

A schematic of the above-described Rubicon Gulch water treatment and management flows and the process flow diagrams for the Richmond Hill Mine are included in Attachments 5 and 6.

RECEIVING WATERS

Surface water at the site is mainly from direct runoff of precipitation and snowmelt, with the remainder base flow from springs and seeps. High flows in the spring typically occur during periods when the surface water drainages receive a combination of snowmelt and precipitation during major storm events.

Any discharge from the Spruce Gulch Water Treatment System will enter Spruce Gulch. Compliance Point 001 is in Spruce Gulch, below the reclaimed rock facility and located approximately 10 yards above the confluence of Cleopatra Creek and Spruce Gulch. This segment of Spruce Gulch is classified by the South Dakota Surface Water Quality Standards (SDSWQS), Administrative Rules of South Dakota (ARSD), Section 74:51:03:01 for the following beneficial uses:

(9) Fish and wildlife propagation, recreation, and stock watering waters; and
(10) Irrigation waters.

Spruce Gulch flows approximately 10 yards to Cleopatra Creek, which is classified by the SDSWQS, ARSD Section 74:51:03:01 and 74:51:03:10 for the following beneficial uses:

(2) Coldwater permanent fish life propagation waters;
(7) Immersion recreation waters;
(8) Limited contact recreation waters;
(9) Fish and wildlife propagation, recreation, and stock watering waters; and
(10) Irrigation waters.

Cleopatra Creek flows approximately 3 miles to Spearfish Creek, which is classified by the SDSWQS, ARSD Section 74:51:03:01 and 74:51:03:10 for the following beneficial uses:

(1) Domestic water supply waters;
(2) Coldwater permanent fish life propagation waters;
(7) Immersion recreation waters;
(8) Limited contact recreation waters;
(9) Fish and wildlife propagation, recreation, and stock watering waters;
(10) Irrigation waters; and
(11) Commerce and Industry waters.

Spearfish Creek's classification changes approximately 0.5 miles downstream of the confluence with Cleopatra Creek, and prior to the confluence with Rubicon Gulch. At this point, Spearfish Creek is classified by the SDSWQS, ARSD Sections 74:51:03:01 and 74:51:03:10 for the following beneficial uses:

(2) Coldwater permanent fish life propagation waters;
(8) Limited contact recreation waters;
(9) Fish and wildlife propagation, recreation, and stock watering waters; and
(10) Irrigation waters.

Any discharge from the Rubicon Gulch Water Treatment System will enter Rubicon Gulch, which is classified at Compliance Point 004 by the SDSWQS, ARSD Sections 74:51:03:01 and 74:51:03:10 for the following beneficial uses:

(3) Coldwater marginal fish life propagation waters;
(8) Limited contact recreation waters;
(9) Fish and wildlife propagation, recreation, and stock watering waters; and
(10) Irrigation waters.

Rubicon Gulch flow about to Spearfish Creek. Spearfish Creek's classification changes approximately 3.2 miles downstream of the confluence with Cleopatra Creek and 2 miles downstream of the confluence with Rubicon Gulch. At this point, Spearfish Creek is classified by the SDSWQS, ARSD Sections 74:51:03:01 and 74:51:03:10 for the following beneficial uses:

(3) Coldwater marginal fish life propagation waters;
(8) Limited contact recreation waters;
(9) Fish and wildlife propagation, recreation, and stock watering waters; and
(10) Irrigation waters.

Since Spruce Gulch has only the minimum fishery beneficial use classification of (9), the SDSWQS (ARSD Section 74:51:01:02.01) require that an analysis of the receiving stream be conducted to determine whether the waterbody deserves a higher beneficial use designation. The South Dakota Department of Agriculture and Natural Resources (SDDANR) has conducted an analysis for Spruce Gulch near the discharge location. SDDANR personnel have determined that the beneficial use classifications for Spruce Gulch are appropriate and will remain unchanged.

TOTAL MAXIMUM DAILY LOAD

Section 303(d) of the federal Clean Water Act requires states to develop Total Maximum Daily Loads (TMDLs) for waters at levels necessary to achieve and maintain water quality standards. TMDLs are calculations of the amount of pollution a waterbody can receive and still maintain applicable water quality standards. According to the federal Clean Water Act, the state must develop TMDLs for all waters identified on their Section 303(d) list of impaired waters, according to their priority ranking on that list. Every two years, the state assesses its water quality and publishes the list of impaired water bodies as part of its Integrated Report.

TMDLs address specific waterbodies, segments of waterbodies, or even entire watersheds, and are pollutant specific. TMDLs must allow for seasonal variations and a margin of safety, which accounts for any lack of knowledge concerning the relationship between pollutant loads and water quality. A wasteload allocation is developed for any point sources that cause or contribute to the water quality impairment.

These segments of the receiving waterbody have not been identified as impaired; therefore, a TMDL is not needed.

ANTIDEGRADATION

ARSD § 74:51:01:34 states:

> *The antidegradation policy for this state is as follows:*
>
> *(1) The existing beneficial uses of surface waters of the state and the level of water quality that is assigned by designated beneficial uses shall be maintained and protected;*
>
> *(2) Surface waters of the state in which the existing water quality is better than the minimum levels prescribed by the designated beneficial use shall be maintained and protected at that higher quality level;*
>
> *(3) The board, or secretary, may allow a lowering of the water quality to levels established under the designated beneficial use if it is necessary in order to accommodate important economic or social development in the area in which the waters are located;*
>
> *(4) Surface waters of the state which do not meet the levels of water quality assigned to the designated beneficial use shall be improved as feasible to meet those levels;*
>
> *(5) No further reduction of water quality may be allowed for surface waters of the state that do not meet the water quality levels assigned to their designated beneficial uses as a result of natural causes or conditions, and all new discharges must meet applicable water quality standards; and*
>
> *(6) The secretary shall assure that regulatory requirements are achieved for all new and existing point sources and that nonpoint sources are controlled through cost effective and reasonable best management practices.*

As noted in ARSD § 74:51:01:34, DANR's goal is to maintain and protect surface water quality. To implement this rule, DANR is required to conduct an antidegradation review for all surface water discharge permits at the time of the review unless the discharge meets one of the following exemptions listed in ARSD § 74:51:01:35:

> *All surface water discharge permits, at the time of renewal, shall undergo an antidegradation of water quality review by the secretary unless any one of the following situations applies:*
>
> *(1) The existing facility is operating at or below design flows and pollutant loadings;*
>
> *(2) The existing effluent quality is in compliance with all of the discharge permit limits;*
>
> *(3) The existing discharge permittee was discharging to the current stream segment prior to March 27, 1973, and the quality and quantity of the discharge has not degraded the water quality of that segment as it existed on March 27, 1973;*

(4) The existing discharge permittee, with department approval, has upgraded or built new wastewater treatment facilities between March 27, 1973, and July 1, 1988; or

(5) The existing discharge permittee discharges to a receiving water assigned only the beneficial uses of fish and wildlife propagation, recreation, and stock watering and irrigation and the discharge is not expected to contain toxic pollutants in concentrations that may cause an impact to the receiving stream. This exemption does not apply to discharges that will cause any adverse impacts to downstream segments that are of higher quality.

LAC Minerals does not meet one of the identified exemptions in ARSD § 74:51:01:35. Therefore, it is necessary for DANR to conduct a formal antidegradation review and notify the public of the results of the review.

Appendix B contains the results of the formal antidegradation review for the LAC Minerals permit. The formal review determined that any change in water quality would be insignificant based on the following rationale:

This permit does not authorize an increase in effluent limits for any parameter except Selenium and ensures the protection of downstream uses. The current permit allows a detection/reporting level of 5 µg/L for selenium, in effect giving the permittee a compliance level of 5 µg/L, despite the effluent limit of 4.6 µg/L. The draft permit requires the permittee to use sufficiently sensitive methods and no longer authorizes a reporting level of 5 µg/L for Selenium.

ARSD § 74:51:01:37.01 states:

For any discharge for which an antidegradation review is required by this chapter, the secretary shall allow for intergovernmental coordination and public participation by providing a public notice of the secretary's recommendation and findings in a daily or weekly newspaper which serves the affected area. The public notice shall follow the requirements of chapter 74:52:05. If a petition in accordance with chapter 74:50:02 contesting the secretary's recommendation is received by the department, a contested case hearing shall be held before the board. If the recommendation is not contested, that recommendation shall become the final determination on the review.

DANR will public notice the permit again on July 27, 2023, in the *Black Hills Pioneer* and the *Rapid City Journal*. This public notice will state the results of the antidegradation review and invite intergovernmental and public participation on DANR's finding that no degradation will be authorized by the surface water discharge permit for LAC Minerals.

MONITORING DATA

LAC Minerals has been submitting Discharge Monitoring Reports (DMRs) as required under the current permit. This facility has had one daily maximum violation of total suspended solids (TSS) and one daily maximum violation of total recoverable selenium since January 2004. However, these

violations seem to be isolated incidences and do not reflect the overall treatment performance of this facility. No future violations are expected. See Attachment 1.

Public access to the facility's monitoring data is available at USEPA's Enforcement and Compliance History Online (ECHO) website: https://echo.epa.gov/

INSPECTIONS

Personnel from SDDANR conducted a Compliance Inspection of the LAC Minerals facility on September 26, 2018. No deficiencies were noted at the time of the inspection.

EFFLUENT LIMITS

Effluent guidelines are national wastewater discharge standards that are developed by USEPA on an industry-by-industry basis. These are technology-based regulations and are intended to represent the greatest pollutant reductions that are economically achievable for an industry.

USEPA promulgated the Ore Mining and Dressing Effluent Guidelines and Standards, 40 CFR Part 440 in 1975, and amended the regulation in 1978, 1979, 1982 and 1988. The regulation covers process wastewater (such as tailings impoundments, heap leach piles, and processing ponds) and mine drainage (such as pit drainage and mine water, seeps and French drains, and disturbed areas). The discharges of these types of wastewater must comply with the federal technology-based effluent limits. In addition, stormwater runoff from a mine's ancillary areas, reclaimed areas, and haul roads must be covered under a permit for stormwater discharges associated with industrial activity.

There is no longer mining activity taking place and no process wastewater is generated at this site. LAC Minerals is in the process of reclamation and the effluent flow is categorized as stormwater in accordance with EPA's 1993 mining memo. Therefore, the draft permit will not require the technology-based limits in 40 CFR 440. The draft permit will incorporate limits to ensure the SDSWQS are maintained and stormwater is appropriately managed to reduce the pollution present in the runoff.

The permittee shall comply with the effluent limits specified below. These limits are based on the SDSWQS, permit writer's judgment, the federal Clean Water Act, and current permit limits.

Compliance Point 001 – Any flow in Spruce Gulch below the reclaimed rock facility and the confluence with South Gulch, and 10 yards upstream from the confluence with Cleopatra Creek (Latitude 44.375000°, Longitude -103.858333°, Satellite Map Interpolation).

1. The TSS concentration shall not exceed 30 mg/L (30-day average) or 53 mg/L (daily maximum). These limits are based on the coldwater permanent fish life propagation waters classification of Cleopatra Creek and Spearfish Creek, the SDSWQS (ARSD Section 74:51:01:45), and permit writer's judgment. These limits will ensure the coldwater

permanent fish life propagation waters beneficial use of Cleopatra Creek and Spearfish Creek is protected.

A statistical review of the water quality data at Compliance Point 001 indicates there is not a reasonable potential for the TSS at this point to violate the existing water quality standards (see Attachment 2). However, controlling the TSS discharged at this site will reduce the potential for other pollutants, such as elevated metals, to be present in the discharge. Therefore, TSS limits will be continued in the draft permit based on the permit writer's judgement.

2. The pH shall not be less than 6.5 standard units or greater than 9.0 standard units in any single analysis and/or measurement. These limits are based on the coldwater permanent fish life propagation waters classifications of Cleopatra Creek and Spearfish Creek and the domestic water supply waters classification of Spearfish Creek, the SDSWQS (ARSD Sections 74:51:01:44 and 74:51:01:45), and is being included because SDDANR has determined there is a reasonable potential for the pH of the effluent to violate the SDSWQS. Therefore, pH limits will be continued in the draft permit based on the permit writer's judgement. These limits will ensure the coldwater permanent fish life propagation waters beneficial use of Cleopatra Creek and Spearfish Creek is protected.

   Note: SDDANR specifies that pH analyses are to be conducted within 15 minutes of sample collection with a pH meter. Therefore, the permittee must have the ability to conduct onsite pH analyses. The pH meter used must be capable of simultaneous calibration to two points on the pH scale that bracket the expected pH and are approximately three standard units apart. The pH meter must read to 0.01 standard units and be equipped with temperature compensation adjustment. Readings shall be reported to the nearest 0.1 standard units.

3. The total recoverable cadmium concentration shall not exceed the limits specified in the table below. Hardness shall be expressed in mg/L. These limits are based on the fish, wildlife, propagation, recreation and stock watering use of Spruce Gulch and Cleopatra Creek and the SDSWQS (ARSD Section 74:51:01:55 and Appendix B) and are being included because SDDANR has determined there is reasonable potential for total recoverable cadmium to be present in the discharge at levels that may violate the SDSWQS.

Effluent Limits – Total Recoverable Cadmium	
30-Day Average (µg/L)	Daily Maximum (µg/L)
$e^{(0.7977[\ln(\text{hardness})]-3.909)}$	$e^{(0.9789[\ln(\text{hardness})]-3.866)}$

The water quality criteria for cadmium in the SDSWQS is based on dissolved cadmium, which is the form of cadmium that is bioavailable and known for its toxic effect on organisms. The total recoverable method of analyzing cadmium provides a conservative estimate of toxicity as it recovers both dissolved cadmium and weakly-bonded cadmium complexes that might become bioavailable. These limits will ensure fish, wildlife,

propagation, recreation, and stock watering waters beneficial use of Cleopatra Creek and Spearfish Creek are protected.

When the USEPA recommends water quality criteria, the criteria are developed based on the total recoverable analysis method. As noted above, the SDSWQS for most metals, including cadmium, are based on the dissolved metals analysis. To convert the USEPA cadmium criteria from total recoverable to dissolved metals, SDDANR used USEPA's recommended conversion factors (CF) to convert the total recoverable criterion to dissolved for the SDSWQS:

The conversion factors for cadmium in the SDSWQS are hardness-based equations:

$$\text{Chronic} = CF * e^{(0.7977[\ln(\text{hardness})]-3.909)}$$
$$\text{Acute} = CF * e^{(0.9789[\ln(\text{hardness})]-3.866)}$$

However, the SDSWQS (Appendix B) and ARSD Section 74:52:03:16 require permit effluent limits to be expressed in terms of total recoverable metals. To convert the SDSWQS's water quality criteria back to total recoverable limits for the draft permit, SDDANR simply removed the CF from the equation. The acute standard was applied as the daily maximum limit and the chronic standard was applied as the 30-day average.

The toxicity of cadmium increases as the hardness of the water decreases. To develop a protective standard for the reasonable potential analysis (RPA), SDDANR reviewed the existing water quality data at Compliance Point 001 and determined the 20th percentile of the 30-day average hardness data (see Attachment 2). For both the daily maximum standard and the 30-day average standard, SDDANR used a hardness value of 216 mg/L to calculate the instream cadmium standard for the reasonable potential analysis. LAC Minerals has requested to keep the instantaneous hardness-based equations for cadmium limits that are in the current permit. LAC Minerals has effectively implemented its hardness-based limits. Therefore, SDDANR has approved this request and is proposing to keep a hardness-based cadmium limit in the draft permit.

SDDANR has determined through a statistical analysis of the water quality data there is a reasonable potential for cadmium to be present in the discharge at levels that may violate the SDSWQS (see Attachment 2). Therefore, limits for cadmium are included in the draft permit to ensure the discharge does not cause or contribute to a violation of the SDSWQS.

4. The oil and grease concentration shall not exceed 10 mg/L or impart a visible film or sheen to the surface or to the adjoining shorelines. This limit is based on the SDSWQS, ARSD Sections 74:51:01:10 and 74:51:01:52.

   The draft permit will require visual monitoring for a sheen during any sampling event. If a sheen is observed, there is a reasonable potential the oil and grease standard could be violated. Therefore, the visual limits and conditional monitoring for oil and grease will be continued in the draft permit based on the permit writer's judgement.

5. There shall be no discharge of floating solids or visible pollutants in other than trace amounts. In addition, the discharge shall not contain materials in concentrations which cause pollutants to be formed in or produce nuisance aquatic life in the receiving water, or that impairs the receiving waters' existing or designated beneficial uses. These limits are based the SDSWQS (ARSD Sections 74:51:01:05, 74:51:01:06, and 74:51:01:09) and the current permit.

6. The waters of the state at Compliance Point 001 must be free from substances attributable to the permittee's discharge that will adversely impact the structure and function of indigenous or intentionally introduced aquatic communities. These limits are based on the SDSWQS (ARSD Section 74:51:01:12).

7. No sanitary wastes or process wastewater shall be introduced into this discharge. This limit is based on permit writer's judgment.

8. The permittee's discharge shall not cause or contribute to a violation of the SDSWQS. This limit is based on the SDSWQS (ARSD Section 74:51:01:02) and the current permit.

9. No chemicals, such as chlorine, corrosion inhibitors, biocides, descalers, etc., shall be added to the discharge without prior written permission from SDDANR. This limit is based on the permit writer's judgment. Chemicals already identified in the permit application process are considered permissible for purposes of this limit.

   Note: With written permission from SDDANR, additional chemical additives may be approved for use without additional public notice.

SDDANR does not believe there is a reasonable potential for other pollutants to violate the SDSWQS. The limits and monitoring in the draft permit will be sufficient to ensure the protection of the water quality near LAC Minerals' discharge.

The current permit for LAC Minerals contains monitoring and limits for the following parameters at Compliance Point 001: weak acid dissociable cyanide (WAD Cyanide), total recoverable copper, total recoverable lead, total recoverable mercury, total recoverable selenium, and total recoverable zinc. SDDANR reviewed the existing water quality monitoring data submitted by LAC Minerals since 2012.

- SDDANR has determined through a statistical analysis of this water quality data there is no reasonable potential for total recoverable lead, total recoverable mercury, total recoverable selenium, or total recoverable zinc to be present at Compliance Point 001 at levels that may violate the SDSWQS (see Attachment 2). Therefore, the effluent limits for these parameters have been removed from the draft permit. However, these are pollutants of concern in gold mining. Monitoring will continue but be reduced to a monthly frequency.

- SDDANR's initial statistical analysis of this water quality data indicated there is reasonable potential for total recoverable copper to be present at Compliance Point 001 at levels that may violate the SDSWQS (see Attachment 2). However, with the removal of 1 copper

result that appears to be an outlier in the dataset, the reasonable potential drops to less than 50% of the SDSWQS for copper and no reasonable potential. Therefore, the effluent limits for copper have been removed from the draft permit. Monitoring will be continued on a biweekly/monthly frequency.

- LAC Minerals is no longer processing ore at this site and cyanide is no longer used. WAD cyanide has no reasonable potential to be present in the discharge at levels that could violate the SDSWQS. Therefore, limits and monitoring for WAD cyanide shall be removed from the draft permit.

The current permit for LAC Minerals requires monitoring only, no effluent limits, for the following parameters at Compliance Point 001: flow rate, total dissolved solids (TDS), five-day biochemical oxygen demand (BOD_5), sulfate, sodium, water temperature, ammonia-nitrogen, nitrates, total hardness, total recoverable aluminum, total recoverable arsenic, total recoverable chromium, total recoverable iron, total recoverable nickel, and total recoverable silver. SDDANR reviewed the existing water quality monitoring data submitted by LAC Minerals since 2012.

- SDDANR has determined through a statistical analysis of this water quality data there is no reasonable potential for total recoverable chromium, total recoverable silver, nitrates, ammonia-nitrogen, or BOD_5 to be present at Compliance Point 001 at levels that may violate the SDSWQS (see Attachment 2). The highest reasonable potential concentration is less than 50% of the water quality criteria for each of these parameters. Therefore, the monitoring requirements for these parameters have been removed from the draft permit.

- SDDANR has determined through a statistical analysis of this water quality data there is no reasonable potential for total recoverable arsenic, total recoverable nickel, TDS, or sulfate to be present at Compliance Point 001 at levels that may violate the SDSWQS (see Attachment 2). However, the highest reasonable potential concentration is greater than 50% of the water quality criteria for each of these parameters. Arsenic is naturally occurring in the Black Hills and has been found present in nearby formations. Therefore, monitoring will be required for total recoverable arsenic, total recoverable nickel, and TDS on a monthly basis. Sulfate monitoring shall continue at a quarterly frequency.

- South Dakota has not adopted a surface water quality standard for iron. The USEPA is in the process of developing water quality standards for iron at a national level. Iron is also an acid rock drainage indicator metal. Therefore, monitoring will continue at a monthly frequency based on the need to properly characterize the discharge and permit writers' judgement. This data will be used in the future to determine if there is a reasonable potential for the discharge to violate any potential water quality criteria for iron.

- Elevated levels of aluminum can affect some species ability to regulate ions, like salts, and inhibit respiratory functions, like breathing. Aluminum can accumulate on the surface of a fish's gill, leading to respiratory dysfunction, and possibly death. In 2018, the USEPA published final updated aquatic life criteria for aluminum in freshwater that reflect the latest science. South Dakota is reviewing this criteria and may be proposing changes to our SDSWQS to include aluminum criteria. Aluminum is also an acid rock drainage indicator

metal. Therefore, SDDANR is proposing to continue aluminum monitoring in the draft permit to provide information on the levels of aluminum in LAC Minerals' discharge. This data will be used in the future to determine if there is a reasonable potential for the discharge to violate any potential water quality criteria for aluminum.

- Hardness does not have a SDSWQS. However, some of LAC Minerals' effluent limits are hardness based and many of the water quality standards for metals vary based on the hardness concentration. Therefore, hardness monitoring will continue in the draft permit. Monitoring will continue on a biweekly/monthly frequency as outlined in the draft permit.

- Sodium does not have a SDSWQS. Monitoring for this parameter was included in the current permit to help characterize the discharge. Sodium is not a pollutant of concern and can be captured in other parameters, such as TDS. Therefore, the monitoring requirement for sodium has been removed from the draft permit.

- The maximum water temperature recorded at this point since 2012 was 17.9°C (64.2°F). There is not a water quality criterion for temperature at the compliance point. However, the water travels 10 yards to Cleopatra Creek. Cleopatra Creek can naturally exceed the standard of 65°F in the summer months. A temperature limit is not needed but monitoring will continue to ensure the water quality at Compliance Point 001 is properly characterized. Monitoring will continue on a biweekly/monthly schedule.

- Flow rate does not have a SDSWQS. Monitoring for this parameter was included in the current permit to help characterize the discharge. This parameter will be continued in the draft permit based on permit writers' judgement.

Compliance Point 004 – Any discharge from the Rubicon Gulch water treatment system. (Latitude 44.401944°, Longitude -103.848333°, Satellite Map Interpolation).

1. The TSS concentration shall not exceed 30 mg/L (30-day average) or 53 mg/L (daily maximum). These limits are based on the coldwater marginal fish life propagation waters classification of Rubicon Gulch, the SDSWQS (ARSD Section 74:51:01:46), and permit writer's judgment and are being included because SDDANR has determined there is a reasonable potential for TSS to be present in the discharge at levels that may violate the SDSWQS. These limits will ensure the downstream coldwater permanent fish life propagation waters beneficial use of Spearfish Creek is protected.

2. The pH shall not be less than 6.5 standard units or greater than 8.8 standard units in any single analysis and/or measurement. These limits are based on the coldwater marginal fish life propagation waters classification of Rubicon Gulch, the SDSWQS (ARSD Section 74:51:01:46), the previous SDSWQS and the current permit. Limits are being included because SDDANR has determined there is a reasonable potential for the pH of the effluent to violate the SDSWQS and prevent backsliding of current permit limits. These limits will ensure the downstream coldwater permanent fish life propagation waters beneficial use of Spearfish Creek is protected.

Note: SDDANR specifies that pH analyses are to be conducted within 15 minutes of sample collection with a pH meter. Therefore, the permittee must have the ability to conduct onsite pH analyses. The pH meter used must be capable of simultaneous calibration to two points on the pH scale that bracket the expected pH and are approximately three standard units apart. The pH meter must read to 0.01 standard units and be equipped with temperature compensation adjustment. Readings shall be reported to the nearest 0.1 standard units.

3. The total recoverable selenium concentration shall not exceed 12.8 µg/L (daily maximum). In addition, the total recoverable selenium concentration shall not exceed 5.0 µg/L in any calendar month average (30-day average). These limits are based on the fish, wildlife, propagation, recreation and stock watering water beneficial use of Rubicon Gulch and the SDSWQS (ARSD Section 74:51:01:55 and Appendix B). These limits are being included because SDDANR has determined there is reasonable potential for total recoverable selenium to be present in the discharge at levels that may violate the SDSWQS. The water quality criteria for selenium in the SDSWQS is based on dissolved selenium, which is the form of selenium that is bioavailable and known for its toxic effect on organisms. The total recoverable method of analyzing selenium provides a conservative estimate of toxicity as it recovers both dissolved selenium and weakly-bonded selenium complexes that might become bioavailable. These limits will ensure fish, wildlife, propagation, recreation, and stock watering waters beneficial use of Rubicon Gulch and Spearfish Creek are protected.

   The acute standard for selenium is based on the fractions of selenite, f_1, and selenate, f_2. $CMC = 1/[(f_1/CMC_1) + (f_2/CMC_2)]$ where CMC_1 and CMC_2 are 185.9 µg/L and 12.82 µg/L, respectively. If selenium sample results are less than 12.8 µg/L, speciation to determine compliance with the standard is not required.

   Note: SDDANR considers the analytical detection level for total recoverable selenium to be 2 µg/L. If the effluent total recoverable selenium is less than the analytical detection level of 2 µg/L, "< 2 µg/L" shall be used for reporting and "0" shall be used for averaging purposes.

4. The oil and grease concentration shall not exceed 10 mg/L or impart a visible film or sheen to the surface or to the adjoining shorelines. This limit is based on the SDSWQS, ARSD Sections 74:51:01:10 and 74:51:01:52.

   The draft permit will require visual monitoring for a sheen during any sampling event. If a sheen is observed, there is a reasonable potential the oil and grease standard could be violated. Therefore, the visual limits and conditional monitoring for oil and grease will be continued in the draft permit based on the permit writer's judgement.

5. There shall be no discharge of floating solids or visible pollutants in other than trace amounts. In addition, the discharge shall not contain materials in concentrations which cause pollutants to be formed in or produce nuisance aquatic life in the receiving water, or that impairs the receiving waters' existing or designated beneficial uses. These limits are

based the SDSWQS (ARSD Sections 74:51:01:05, 74:51:01:06, and 74:51:01:09) and the current permit.

6. The waters of the state at Compliance Point 004 must be free from substances attributable to the permittee's discharge that will adversely impact the structure and function of indigenous or intentionally introduced aquatic communities. These limits are based on the SDSWQS (ARSD Section 74:51:01:12).

7. No sanitary wastes, mine drainage, or process wastewater shall be introduced into this discharge. This limit is based on permit writer's judgment.

8. The permittee's discharge shall not cause or contribute to a violation of the SDSWQS. This limit is based on the SDSWQS (ARSD Section 74:51:01:02) and the current permit.

9. No chemicals, such as chlorine, corrosion inhibitors, biocides, descalers, etc., shall be added to the discharge without prior written permission from SDDANR. This limit is based on the permit writer's judgment. Chemicals already identified in the permit application process are considered permissible for purposes of this limit.

   Note: With written permission from SDDANR, additional chemical additives may be approved for use without additional public notice.

SDDANR does not believe there is a reasonable potential for other pollutants to violate the SDSWQS. The limits and monitoring in the draft permit will be sufficient to ensure the protection of the water quality near LAC Minerals' discharge.

The current permit for LAC Minerals contains monitoring and limits for the following parameters at Compliance Point 004: water temperature, WAD cyanide, total recoverable arsenic, total recoverable cadmium, total recoverable chromium, total recoverable copper, total recoverable lead, total recoverable mercury, total recoverable nickel, total recoverable silver, and total recoverable zinc. SDDANR reviewed the existing water quality monitoring data submitted by LAC Minerals since 2012.

- SDDANR has determined through a statistical analysis of this water quality data there is no reasonable potential for total recoverable copper, total recoverable lead, total recoverable mercury, or total recoverable zinc to be present at Compliance Point 004 at levels that may violate the SDSWQS (see Attachment 2). Therefore, the effluent limits for these parameters have been removed from the draft permit. However, these are pollutants of concern in gold mining. Monitoring will be reduced to a monthly frequency.

- SDDANR has determined through a statistical analysis of this water quality data there is no reasonable potential for total recoverable arsenic, total recoverable cadmium, total recoverable chromium, total recoverable nickel, or total recoverable silver to be present at Compliance Point 004 at levels that may violate the SDSWQS (see Attachment 2). The highest reasonable potential concentration is less than 50% of the water quality criteria for each of these parameters. Therefore, the monitoring requirements for these parameters have been removed from the draft permit.

- The maximum water temperature recorded at this point since 2012 was 22.8°C (73.0°F). Rubicon Gulch can naturally exceed the standard of 75°F in the summer months. The effluent limit is being removed from the draft permit. Monitoring will continue to ensure the water quality at Compliance Point 004 is properly characterized. Monitoring will continue on a biweekly/monthly schedule.

- LAC Minerals is no longer processing materials. WAD cyanide has no reasonable potential to be present in the discharge at levels that could violate the SDSWQS. Therefore, limits and monitoring for WAD cyanide shall be removed from the draft permit.

The current permit for LAC Minerals requires monitoring only, no effluent limits, for the following parameters at Compliance Point 004: flow rate, TDS, BOD_5, dissolved oxygen (DO), sulfate, sodium, ammonia-nitrogen, nitrate-nitrogen, total hardness, total recoverable aluminum, and total recoverable iron. SDDANR reviewed the existing water quality monitoring data submitted by LAC Minerals since 2012.

- SDDANR has determined through a statistical analysis of this water quality data there is no reasonable potential for ammonia-nitrogen, nitrate-nitrogen, BOD_5 or sulfate to be present at Compliance Point 004 at levels that may violate the SDSWQS (see Attachment 2). The highest reasonable potential concentration is less than 50% of the water quality criteria for each of these parameters. Therefore, the monitoring requirements for these parameters have been removed from the draft permit.

- SDDANR has determined through a statistical analysis of this water quality data there is no reasonable potential for TDS to be present at Compliance Point 004 at levels that may violate the SDSWQS (see Attachment 2). However, the highest reasonable potential concentration is greater than 50% of the water quality criteria for TDS. Therefore, monitoring will be required for TDS on a monthly basis.

- Total recoverable iron does not have any SDSWQS. Water quality standards are being developed by the USEPA. This data will be used in the future to determine if there is a reasonable potential for the discharge to violate the total recoverable iron criteria. Monitoring will continue at a monthly frequency based on the need to properly characterize the discharge and permit writers' judgement. Iron is also an acid rock drainage indicator metal.

- Elevated levels of aluminum can affect some species ability to regulate ions, like salts, and inhibit respiratory functions, like breathing. Aluminum can accumulate on the surface of a fish's gill, leading to respiratory dysfunction, and possibly death. In 2018, the USEPA published final updated aquatic life criteria for aluminum in freshwater that reflect the latest science. South Dakota is reviewing this criteria and may be proposing changes to our SDSWQS to include aluminum criteria. Aluminum is also an acid rock drainage indicator metal. SDDANR is proposing to continue aluminum monitoring in the draft permit to provide information on the levels of aluminum in LAC Minerals' discharge. This data will

be used in the future to determine if there is a reasonable potential for the discharge to violate the aluminum criteria.

- The minimum DO level measured at this point since 2012 was 4.88 mg/L; which is below the minimum standard of 5.0 mg/L. There was only one other value under 6 mg/L. Therefore, the monitoring requirements for DO will be continued in the draft permit.

- Hardness does not have a SDSWQS. However, some of LAC Minerals' monitoring requirements are based on the hardness concentration. Therefore, hardness monitoring will continue in the draft permit. Monitoring will be reduced to a monthly frequency.

- Sodium does not have a SDSWQS. Monitoring for this parameter was included in the current permit to help characterize the discharge. Sodium is not a pollutant of concern and can be captured in other parameters such as TDS. Therefore, the monitoring requirement for sodium has been removed from the draft permit.

- Flow rate does not have a SDSWQS. Monitoring for this parameter was included in the current permit to help characterize the discharge. This parameter will be continued in the draft permit based on permit writers' judgement.

SELF MONITORING REQUIREMENTS

Compliance Point 001

The draft permit requires the permittee to monitor all discharges for TSS (mg/L), pH (su), total recoverable cadmium (µg/L), oil and grease (contingent, mg/L), a visual observation of oil and grease (presence or absence), and a visual observation of floating solids or visible foam (presence or absence). These monitoring requirements are based on the limits in the draft permit for these parameters. Water temperature (°C), TDS (mg/L), total recoverable arsenic (µg/L), total recoverable copper (µg/L), total recoverable mercury (µg/L), total recoverable aluminum (µg/L), total recoverable iron (µg/L), total recoverable lead (µg/L), total recoverable nickel (µg/L), total recoverable selenium (µg/L), total sulfate (as SO_4, mg/L), total hardness (as $CaCO_3$, mg/L), total recoverable zinc (µg/L), and flow rate (MGD) shall be monitored, but will not have a limit. These monitoring requirements are based on the need to fully characterize the discharge.

The draft permit requires the permittee to monitor all discharges for pH (s.u.), total recoverable cadmium (µg/L), total recoverable copper (µg/L), oil and grease (contingent, mg/L), visual observation of oil and grease (presence or absence), a visual observation of floating solids or visible foam (presence or absence), total hardness (as $CaCO_3$, mg/L), water temperature (ºC), and flow rate (MGD) shall be monitored on a **biweekly** basis from April 1 – September 30 and monitored on a **monthly** basis from October 1 – March 31. TSS (mg/L), TDS (mg/L), total recoverable aluminum (µg/L), total recoverable arsenic (µg/L), total recoverable mercury (µg/L), total recoverable lead (µg/L), total recoverable nickel (µg/L), total recoverable selenium (µg/L), total recoverable zinc (µg/L), and total recoverable iron (µg/L) shall be monitored on a **monthly** basis. Total sulfate (as SO_4, mg/L) shall be monitored on a **quarterly** basis. All samples collected during the 30-day period shall be used in determining the averages. The permittee always has the option of collecting additional samples if appropriate.

Compliance Point 004
The draft permit requires the permittee to monitor all discharges for TSS (mg/L), pH (su), total recoverable selenium (µg/L), oil and grease (contingent, mg/L), a visual observation of oil and grease (presence or absence), and a visual observation of floating solids or visible foam (presence or absence). These monitoring requirements are based on the limits in the draft permit for these parameters. Water temperature (°C), total recoverable aluminum (µg/L), total recoverable copper (µg/L), total recoverable iron (µg/L), total recoverable lead (µg/L), total recoverable mercury (µg/L), total recoverable zinc (µg/L), total hardness (as $CaCO_3$, mg/L), DO (mg/L), TDS (mg/L), and flow rate (MGD) shall be monitored, but will not have a limit. These monitoring requirements are based on the need to fully characterize the discharge.

The draft permit requires the permittee to monitor all discharges for pH (s.u.), total recoverable selenium (µg/L), oil and grease (contingent, mg/L), visual observation of oil and grease (presence or absence), a visual observation of floating solids or visible foam (presence or absence), water temperature (ºC), and flow rate (MGD) shall be monitored on a **biweekly** basis from April 1 – September 30 and monitored on a **monthly** basis from October 1 – March 31. TSS (mg/L), total recoverable aluminum (µg/L), total recoverable copper (µg/L), DO (mg/L), TDS (mg/L), total recoverable iron (µg/L), total recoverable mercury (µg/L), total recoverable lead (µg/L), total recoverable zinc (µg/L), and total hardness (as $CaCO_3$, mg/L) shall be monitored on a **monthly** basis. All samples collected during the 30-day period shall be used in determining the averages. The permittee always has the option of collecting additional samples if appropriate.

LAC Minerals was approved to electronically submit DMRs through NetDMR on September 26, 2013. Effluent monitoring results shall be summarized for each month and recorded on a DMR to be submitted via NetDMR to SDDANR on a **monthly** basis. If no discharge occurs during a month, it shall be stated as such on the DMR.

On October 22, 2015, the USEPA published in the federal register a rule that makes electronic reporting of permit reporting requirements mandatory for all SWD permits. Phase 1 of the rule requires that all DMRs must be submitted electronically as of December 21, 2016. Currently, SDDANR is approved to accept DMRs electronically via NetDMR. USEPA's rule will require all permit reporting requirements (such as permit applications and violation reports) to be submitted electronically. SDDANR is working on programs to meet this requirement and will notify facilities as they become available.

Monitoring shall be conducted **biweekly** from April 1 – September 30 and **monthly** from October 1 – March 31. This includes inspections of the facility, and compliance points to verify that proper operation and maintenance procedures are being practiced. Documentation of each of these visits shall be kept in a notebook to be reviewed by SDDANR or USEPA personnel when an inspection occurs.

BIOLOGICAL MONITORING

Whole Effluent Toxicity Testing
The SDSWQS require waters of the state to be free from substances in a discharge that will adversely impact aquatic communities (ARSD Section 74:51:01:12). SDDANR typically requires

whole effluent toxicity testing of effluent to implement this provision of the SDSWQS. LAC's current permit requires both whole effluent toxicity and a biological monitoring program that assesses habitat, fish populations, benthic invertebrate populations, and periphyton in its receiving streams. LAC has not had a violation of the acute whole effluent toxicity limit at any of its compliance points or outfalls.

The biological monitoring program provides a more holistic review of the impact of LAC's activities. Therefore, SDDANR is eliminating the acute whole effluent toxicity testing but continuing the biological monitoring program in the draft permit.

Biological Monitoring Program

LAC is implementing a biological monitoring program under the current permit. The draft permit requires LAC to work with SDDANR and the South Dakota Department of Game, Fish, and Parks (SDGFP) to revise and implement their biomonitoring program. A draft of the revised program must be submitted to for SDDANR's review and approval by **March 1, 2023**.

As part of the biomonitoring, LAC must collect water quality samples at each biomonitoring site. The data collection for the biomonitoring program must be completed by **September 10th** of each reporting year. The instream water quality monitoring must be conducted **within 30 days** of the biomonitoring. The results of the analysis of the samples must be submitted with the report. Sample parameters include, at a minimum:

Flow Rate, million gallons per day
Total Dissolved Solids (TDS), mg/L
Conductivity, µmhos/cm
Alkalinity, mg/L
pH, standard units
Effluent Water Temperature, °F
Upstream Receiving Waters Water Temperature (instream), °F
Downstream Receiving Waters Water Temperature (instream), °F
Dissolved Oxygen, mg/L
Dissolved Phosphorus, mg/L
Five-Day Biochemical Oxygen Demand (BOD5), mg/L
Total Suspended Solids (TSS), mg/L
Nitrate-Nitrogen (as N), mg/L
Weak Acid Dissociable Cyanide, mg/L
Visible Pollutants, visual
Oil and Grease, visual
Oil and grease (hexane ext. method), mg/L
Total Hardness as CaCO3, mg/L
Dissolved Aluminum, µg/L
Dissolved Arsenic, µg/L
Dissolved Cadmium, µg/L
Dissolved Chromium, µg/L
Dissolved Copper, µg/L
Dissolved Iron, µg/L
Dissolved Lead, µg/L
Dissolved Mercury, µg/L
Dissolved Molybdenum, µg/L
Dissolved Nickel, µg/L
Dissolved Selenium, µg/L
Selenate (Se6+), µg/L
Selenite (Se4+), µg/L
Dissolved Silver, µg/L
Dissolved Zinc, µg/L

SDDANR and SDGFP will periodically review the Biomonitoring Plan with LAC to determine if revisions are necessary. When SDDANR determines that revisions are required, LAC will have one year to update the Biomonitoring Plan to reflect the required revisions and implement the revisions at the following biomonitoring event.

The report with supporting data must be submitted to SDDANR and SDGFP by **April 15th** of the following year after the data collection. An electronic copy of the report and supporting data shall be emailed to SDDANR at stormwater@state.sd.us.

INSTREAM MONITORING

The instream monitoring of Cleopatra Creek will be continued in the proposed permit. This monitoring will provide information on LAC Minerals' contribution to the stream and ensure that the draft limits will continue to be protective of the beneficial uses of Cleopatra Creek and Spearfish Creek. Hardness shall be monitored since the SDSWQS for some metals are hardness based.

In the current permit, LAC Minerals is required to monitor two additional instream points. This additional monitoring is due to the fact that LAC Minerals was only required to meet best available technology metal limits for the tributaries of Cleopatra Creek, and due to potential impacts from sources other than Richmond Hill (i.e., the Wharf Resources' mine and historic impacts). This data was reviewed to determine if any impacts were occurring as a result of LAC Minerals' discharge. The data indicates that the discharges from LAC Minerals to the tributaries of Cleopatra Creek are not impairing the beneficial uses in Cleopatra Creek.

LAC Minerals will be required to continue monthly monitoring at Instream Monitoring Point STR1 (Upstream) which is in Cleopatra Creek at the confluence with the East Branch of Cleopatra Creek (Latitude 44.371944°, Longitude -103.854167°), and at Instream Monitoring Point STR2 (Downstream) which is 10 yards upstream of Cleopatra Creek's confluence with Spearfish Creek (Latitude 44.401111°, Longitude -103.894444°). This monitoring is required to determine LAC Minerals' contribution to Cleopatra Creek.

This monthly monitoring shall be conducted within 48 hours of the monthly compliance samples collected at Compliance Point 001. This monitoring will be helpful in determining LAC Minerals' impact on Cleopatra Creek. This monitoring shall be included on a Discharge Monitoring Report and reported each month.

The current permit for LAC Minerals requires monitoring only, no effluent limits, for the following parameters at Instream Monitoring Points STR1 and STR2: flow rate, TDS, TSS, total petroleum hydrocarbons, pH, water temperature, ammonia-nitrogen (as N), nitrate-nitrogen (as N), WAD cyanide, total hardness (as $CaCO_3$), total recoverable aluminum, total recoverable arsenic, total recoverable cadmium, total recoverable chromium, total recoverable copper, total recoverable iron, total recoverable lead, total recoverable mercury, total recoverable nickel, total recoverable selenium, total recoverable silver, and total recoverable zinc. SDDANR reviewed the existing water quality monitoring data submitted by LAC Minerals since 2012.

Instream Monitoring Points STR1

The draft permit requires the permittee to monitor Instream Monitoring Point STR1 for pH (s.u.), TDS (mg/L), total recoverable aluminum (µg/L), total recoverable arsenic (µg/L), total recoverable cadmium (µg/L), total recoverable chromium (µg/L), total recoverable copper (µg/L), total recoverable iron (µg/L), total recoverable lead (µg/L), total recoverable nickel (µg/L), total recoverable selenium (µg/L), total recoverable silver (µg/L), total recoverable zinc (µg/L), oil and

grease (contingent, mg/L), visual observation of oil and grease (presence or absence), total hardness (as $CaCO_3$, mg/L), nitrate-nitrogen (as N, mg/L), water temperature (ºC), and flow rate (MGD). These shall be monitored on a **monthly** basis.

Table 1: STR1 Reasonable Potential (RP) Analysis

Parameter	Acute Standard		Chronic Standard	
	Greater than 50% of SDSWQS?	RP?	Greater than 50% of SDSWQS?	RP?
Total Recoverable Arsenic	N	N	N	N
Total Recoverable Cadmium	Y	Y	Y	Y
Total Recoverable Chromium	N	N	Y	N
Total Recoverable Copper	Y	Y	Y	Y
Total Recoverable Lead	N	N	Y	Y
Total Recoverable Mercury	N	N	N	N
Total Recoverable Nickel	N	N	Y	N
Total Recoverable Selenium	Y	N	Y	Y
Total Recoverable Silver	Y	Y	Y	Y
Total Recoverable Zinc	Y	Y	Y	Y
Total Suspended Solids	N	N	N	N
Total Dissolved Solids	N	N	N	N
Nitrate-Nitrogen (as N)	Y	Y	N	N
WAD Cyanide	N	N	Y*	Y*

* All samples have been non detect. Monitoring will be removed from the draft permit.

- SDDANR has determined there is reasonable potential for total recoverable cadmium, total recoverable copper, total recoverable lead, total recoverable selenium, total recoverable silver, total recoverable zinc, or nitrate nitrogen (as N) to be present at STR1 at levels that may violate the SDSWQS. Therefore, the monitoring requirements for these parameters have been continued in the draft permit.

- SDDANR has determined through a statistical analysis of this water quality data there is no reasonable potential for total recoverable chromium or total recoverable nickel to be present at STR1 at levels that may violate the SDSWQS (see Attachment 2). The highest reasonable potential concentration is greater than 50% of the water quality criteria for each of these parameters. Therefore, the monitoring requirements for these parameters have been continued in the draft permit.

- SDDANR has determined through a statistical analysis of this water quality data there is no reasonable potential for TSS, ammonia-nitrogen, or total recoverable mercury to be present at STR1 at levels that may violate the SDSWQS (see Attachment 2). The highest reasonable potential concentration is less than 50% of the water quality criteria for each of these parameters. Therefore, the monitoring requirements for these parameters have been removed from the draft permit.

- Monitoring for water temperature, pH, and oil and grease shall be continued in the draft permit. These monitoring requirements are based on the need to classify the water at STR1. The draft permit will require visual monitoring for a sheen during any sampling event. If a sheen is observed, there is a reasonable potential the oil and grease standard could be violated, and a grab sample must be taken.

- SDDANR has determined through a statistical analysis of this water quality data there is no reasonable potential for TDS or total recoverable arsenic to be present at STR1 at levels that may violate the SDSWQS (see Attachment 2). However, these are pollutants of concern.

- Total recoverable iron does not have any SDSWQS. Water quality standards are being developed by the USEPA. This data will be used in the future to determine if there is a reasonable potential at STR1 to violate the total recoverable iron criteria. Monitoring will continue at a monthly frequency.

- Elevated levels of aluminum can affect some species ability to regulate ions, like salts, and inhibit respiratory functions, like breathing. Aluminum can accumulate on the surface of a fish's gill, leading to respiratory dysfunction, and possibly death. In 2018, the USEPA published final updated aquatic life criteria for aluminum in freshwater that reflect the latest science. This data will be used in the future to determine if there is a reasonable potential at STR1 to violate the total recoverable aluminum criteria. Monitoring will continue at a monthly frequency.

- LAC Minerals is no longer processing materials. WAD cyanide has no reasonable potential to be present at STR1 at levels that could violate the SDSWQS. Therefore, monitoring for WAD cyanide shall be removed from the draft permit.

- Flow rate does not have a SDSWQS. Monitoring for this parameter will be continued in the draft permit.

- Hardness does not have a SDSWQS. However, the water quality standards for some metals at the instream points are based on the hardness concentration. Therefore, hardness monitoring will continue in the draft permit. Monitoring will be continued at a monthly frequency.

Instream Monitoring Point STR2

The draft permit requires the permittee to monitor Instream Monitoring Point STR2 for pH (s.u.), total recoverable aluminum (µg/L), total recoverable cadmium (µg/L), total recoverable copper (µg/L), total recoverable iron (µg/L), total recoverable lead (µg/L), total recoverable selenium (µg/L), total recoverable silver (µg/L), total recoverable zinc (µg/L), oil and grease (contingent, mg/L), visual observation of oil and grease (presence or absence), total hardness (as $CaCO_3$, mg/L), water temperature (ºC), and flow rate (MGD). These shall be monitored on a **monthly** basis.

Table 2: STR2 Reasonable Potential (RP) Analysis

Parameter	Acute Standard		Chronic Standard	
	Greater than 50% of SDSWQS?	RP?	Greater than 50% of SDSWQS?	RP?
Total Recoverable Arsenic	N	N	N	N
Total Recoverable Cadmium	N	N	Y	Y
Total Recoverable Chromium	N	N	N	N
Total Recoverable Copper	N	N	Y	N
Total Recoverable Lead	N	N	Y	N
Total Recoverable Mercury	N	N	N	N
Total Recoverable Nickel	N	N	N	N
Total Recoverable Selenium	N	N	Y	N
Total Recoverable Silver	Y	Y	Y	N
Total Recoverable Zinc	Y	N	Y	N
Total Suspended Solids	N	N	N	N
Total Dissolved Solids	N	N	N	N
Nitrate-Nitrogen (as N)	N	N	N	N
WAD Cyanide	N	N	Y*	Y*

* All samples have been non detect. Monitoring will be removed from the draft permit.

- SDDANR has determined there is reasonable potential for total recoverable cadmium and total recoverable silver to be present at STR2 at levels that may violate the SDSWQS. Therefore, the monitoring requirements for these parameters have been continued in the draft permit.

- SDDANR has determined through a statistical analysis of this water quality data there is no reasonable potential for total recoverable copper, total recoverable lead, total recoverable selenium, or total recoverable zinc to be present at STR2 at levels that may violate the SDSWQS (see Attachment 2). The highest reasonable potential concentration is greater than 50% of the water quality criteria for each of these parameters. Therefore, the monitoring requirements for these parameters have been continued in the draft permit.

- SDDANR has determined through a statistical analysis of this water quality data there is no reasonable potential for TSS, TDS, ammonia-nitrogen, total recoverable arsenic, total recoverable chromium, total recoverable mercury, total recoverable nickel, or nitrate-nitrogen (as N) to be present at STR2 at levels that may violate the SDSWQS (see Attachment 2). The highest reasonable potential concentration is less than 50% of the water quality criteria for each of these parameters. Therefore, the monitoring requirements for these parameters have been removed from the draft permit.

- Monitoring for water temperature, pH, and oil and grease shall be continued in the draft permit. These monitoring requirements are based on the need to classify the water at STR2. The draft permit will require visual monitoring for a sheen during any sampling event. If a sheen is

observed, there is a reasonable potential the oil and grease standard could be violated, and a grab sample must be taken.

- Total recoverable iron does not have any SDSWQS. Water quality standards are being developed by the USEPA. This data will be used in the future to determine if there is a reasonable potential at STR2 to violate the total recoverable iron criteria. Monitoring will continue at a monthly frequency.

- Elevated levels of aluminum can affect some species ability to regulate ions, like salts, and inhibit respiratory functions, like breathing. Aluminum can accumulate on the surface of a fish's gill, leading to respiratory dysfunction, and possibly death. In 2018, the USEPA published final updated aquatic life criteria for aluminum in freshwater that reflect the latest science. This data will be used in the future to determine if there is a reasonable potential at STR2 to violate the total recoverable aluminum criteria. Monitoring will continue at a monthly frequency.

- LAC Minerals is no longer processing materials. WAD cyanide has no reasonable potential to be present at STR2 at levels that could violate the SDSWQS. Therefore, monitoring for WAD cyanide shall be removed from the draft permit.

- Flow rate does not have a SDSWQS. Monitoring for this parameter will be continued in the draft permit.

- Hardness does not have a SDSWQS. However, the water quality standards for some metals at the instream points are based on the hardness concentration. Therefore, hardness monitoring will continue in the draft permit. Monitoring will be continued at a monthly frequency.

SLUDGE

Based on LAC Minerals' permit application, SDDANR does not anticipate sludge will be removed or disposed of during the life of the permit. Therefore, the draft Surface Water Discharge permit shall not contain sludge disposal requirements. However, if sludge disposal is necessary, SDDANR's Minerals, Mining, and Superfund Program regulates sludge from this facility. The facility is required to contact the Minerals, Mining, and Superfund Program at (605) 773-4201 **prior** to the removal and disposal of sludge.

LAC Minerals converted the barren pond into a sludge pond in 2011. The sludge pond will be used for storage of sludge until full. At that time, the pond will be closed and reclaimed in place. Sludge disposal might be necessary for the storage pond relining project scheduled for 2023.

STORMWATER PERMIT CONDITIONS

Effluent Limits

The draft permit contains effluent limits requiring LAC Minerals to minimize the pollutants in the stormwater runoff to the extent practicable. These limits are based on the effluent limits in the *South Dakota General Permit for Stormwater Discharges Associated with Industrial Activity*.

1. All necessary stormwater control measures shall be implemented to eliminate or minimize contact of stormwater with materials or activities that may result in pollution of the runoff. If contact cannot be eliminated or reduced, stormwater should be treated before it is discharged from the site.

2. All stormwater control measures shall be selected, designed, and installed to minimize the pollutants present in runoff. The stormwater controls must be designed to function properly and withstand a 2-year, 24-hour precipitation event or snowmelt large enough to cause runoff.

3. LAC Minerals shall maintain all stormwater controls in effective working order:

    a. If any control measures are not operating effectively, LAC Minerals shall perform maintenance on the control measures as necessary to maintain the continued effectiveness of the stormwater control measures and before the next anticipated storm event or within seven days of identifying the need for maintenance, whichever comes first.

    b. At a minimum, LAC Minerals shall remove sediment from controls when design capacity has been reduced by 50%.

    c. All control measures and other protective measures identified in the stormwater pollution prevention plan shall be maintained in effective operating condition. If the site inspections required by Section 4.4 of the draft permit identify control measures that are not operating effectively, maintenance shall be performed as stated above.

4. LAC Minerals must have effective downgradient sediment controls and controls for any side slope boundaries to minimize pollutant discharges from the site.

5. LAC Minerals shall minimize dust generation and vehicular tracking of soil or other pollutants off-site to avoid pollutants from being deposited into surface waters of the state:

    a. If pollutants escape the site, LAC Minerals shall remove the off-site accumulations of pollutants by the end of the same workday.

    b. Use appropriate stabilization techniques at all site access points so that sediment removal occurs prior to vehicle exit.

    c. LAC Minerals shall revise the stormwater pollution prevention plan and implement control measures to minimize further off-site track-out or sedimentation.

6. If sediment escapes the site, LAC Minerals must initiate removal of the offsite accumulations by the end of the same workday to minimize impacts. LAC Minerals must revise the stormwater pollution prevention plan and implement controls to minimize further offsite accumulations.

7. LAC Minerals shall place velocity dissipation devices at discharge points and along the length of a runoff conveyance, as necessary, to provide a non-erosive flow and protect the receiving waters of the state's natural uses and characteristics; both physical and biological.

8. For any stockpiles or land clearing debris, LAC Minerals shall:

    a. Locate the stockpiles and debris outside of any natural buffers and away from any stormwater conveyances, drain inlets, and areas where stormwater flow is concentrated;

    b. Protect the stockpiles and debris from contact with stormwater run-on by using temporary sediment controls, berms, or other best management practices;

    c. Properly maintain and position stockpiles and debris to minimize dust generation and wind transport of sediment;

    d. Minimize stormwater runoff from the piles by properly positioning stockpiles and debris or installing effective sediment controls; and

    e. Stockpiles and debris shall not be placed in surface waters of the state.

9. LAC Minerals shall properly handle, store, and dispose of litter, chemicals, scrap material, raw material, fuel, and other materials to minimize pollutants entering stormwater discharges. Final products intended for outdoor use, other than products that would be mobilized in stormwater discharges (e.g., rock salt) are exempt from this requirement. Permittees are required to minimize the discharge of solid materials to waters of the state (except where authorized by a Section 404 permit from the United States Army Corps of Engineers).

10. LAC Minerals shall have the capacity to control, contain, and remove spills at the site.

    a. If spills do occur, LAC Minerals shall implement control measures to minimize the potential for contamination of the stormwater and modify the stormwater pollution prevention plan with the location of the spill and any new control measures.

    b. Spills in excess of reportable quantities shall be properly reported as stated in Section 5.11 of the draft permit.

    c. Clean up spills by the end of the same workday in which the spill occurred and dispose of used materials properly.

11. LAC Minerals shall design, install, implement, and maintain effective pollution prevention measures to minimize the discharge of pollutants from the activities listed below.

    a. The following discharges are prohibited: detergents, soaps, solvents, toxic or hazardous substances from a spill or other release, waste, garbage, and sanitary waste.

b. If LAC Minerals fuels or maintains equipment or vehicles at the site, minimize the discharge of spilled or leaked material from the area where these activities take place.

c. The washing of vehicles and equipment must be limited to a defined area of the site and wash water must be properly disposed.

d. Properly store, handle, and dispose of any products, materials, chemicals, pesticides, fertilizers, and other material to minimize the exposure to stormwater.

Stormwater Pollution Prevention Plan (SWPPP)
To ensure the effective implementation of the stormwater conditions in the permit, LAC Minerals shall be required to update and implement changes to its SWPPP by **December 1, 2023**. If LAC Minerals determines any of the stormwater effluent limits are infeasible, the rationale and justification must be documented in the SWPPP.

The SWPPP must be updated as site conditions change and if the controls are not effective at minimizing the discharge of pollutants. The SWPPP must be maintained onsite and made readily available to SDDANR upon request.

Stormwater Inspections
LAC Minerals shall be required to conduct an **annual** comprehensive site compliance evaluation of the entire site. Areas contributing to a stormwater discharge shall be visually inspected for evidence of, or the potential for, pollutants entering the drainage system. Measures to reduce pollutant loadings shall be evaluated to determine if they are adequate and properly implemented or if additional control measures are needed. Structural control measures, stormwater control measures, and other structural pollution prevention measures identified in the plan shall be observed to ensure they are operating correctly. LAC Minerals shall visually inspect equipment needed to implement the SWPPP, such as spill response equipment.

In addition to the annual comprehensive site compliance evaluation, LAC Minerals shall conduct a **semi-annual** inspection to evaluate the effectiveness of the controls in place at the site and identify necessary maintenance, changes, and improvements. The semi-annual inspections shall also evaluate the completeness and accuracy of the SWPPP.

All stormwater inspections shall be conducted by an appropriately trained person familiar with the permit conditions and the SWPPP. The inspections must be documented in writing and must be made available to SDDANR upon request. All inspections must be signed with the following certification statement:

> *I certify under penalty of law that this document and all attachments were prepared under my direction or supervision in accordance with a system designed to assure that qualified personnel properly gather and evaluate the information submitted. Based on my inquiry of the person or persons who manage the system, or those persons directly responsible for gathering the information, the information submitted is, to the best of my knowledge and belief, true, accurate, and complete. I am aware that there are significant*

penalties for submitting false information, including the possibility of fine and imprisonment for knowing violations.

ENDANGERED SPECIES

This is a renewal of an existing permit. No listed endangered species are expected to be impacted by activities related to this permit. However, the table below shows the species that may be present in the LAC Minerals' geographic area.

COUNTY	GROUP	SPECIES
LAWRENCE	BIRD	WHOOPING CRANE
LAWRENCE	MAMMAL	NORTHERN LONG-EARED BAT

This information was accessible at the following US Fish and Wildlife Service website as of July 19, 2023: https://www.fws.gov/mountain-prairie/es/southdakota/SpeciesByCounty_Feb2021.pdf.

PERMIT EXPIRATION

A five-year permit is recommended.

PERMIT CONTACT

This statement of basis and the draft permit were developed by Tom Anderson, Environmental Engineer for the Water Quality Program. Any questions pertaining to this statement of basis or the draft permit can be directed to the Water Quality Program, at (605) 773-3351.

July 19, 2023

ATTACHMENT 1

Monitoring Data

Sample data below the highlighted (2012-2022) was used in developing a statistical analysis using the reasonable potential analysis methodology that is documented in *Reasonable Potential Implementation Procedure for SWD Permits* (2013). Sample data above the highlighted lines (July 2005 – 2011) is the sample data submitted by LAC Minerals during the current permit cycle.

AR – Administratively Resolved
BD – Below Detection Limit / No Detection
EC – Environmental Conditions – Monitoring Not Possible
FR – Frozen Conditions
ND – No Discharge
NR – Conditional Monitoring – Not Required This Period
WR – Weather Related

Compliance Point 001 - A

DMR	Flow rate		Water Temperature		pH		BOD5		TSS		Ammonia-Nitrogen		Oil and grease visual	TPH	Total Recoverable Copper	
	Daily Min	Daily Max	30-Day Avg	Daily Max	Daily Min	Daily Max	30-Day Avg	Daily Max	30-Day Avg	Daily Max	30-Day Avg	Daily Max	Daily Max	Daily Max	30-Day Avg	Daily Max
	MGD	MGD	deg C	deg C	6 SU	9 SU	mg/L	mg/L	90 mg/L	158 mg/L	mg/L	mg/L	N=0;Y=1	10 mg/L	150 ug/L	300 ug/L
Jul 2005	0.03	0.03	14.6	15.9	7.18	7.47	0	3	10	10	0	0.05	0	NR	0	5
Aug 2005	0.01	0.02	13.65	14.3	7.18	7.35	0	3	23	46	0	0.05	0	NR	0	5
Sep 2005	0	0	12.03	12.6	7.01	7.3	0	3	10	10	0	0.05	0	NR	2.67	8
Oct 2005	0.01	0.01	7.5	7.5	7.16	7.16	BD	BD	10	10	BD	BD	0	NR	BD	BD
Nov 2005	0.01	0.01	2.3	2.3	7.07	7.07	3	3	10	10	0.05	0.05	0	NR	5	5
Dec 2005	0.01	0.01	1.1	1.1	7.18	7.18	3	3	10	10	0.05	0.05	0	NR	5	5
Jan 2006	0.01	0.01	0.5	0.5	7.33	7.33	3	3	10	10	0.05	0.05	0	NR	5	5
Feb 2006	0.01	0.01	0.6	0.6	7.01	7.01	3	3	10	10	0.05	0.05	0	NR	5	5
Mar 2006	0.01	0.01	1	1	7.13	7.13	3	3	10	10	0.05	0.05	0	NR	5	5
Apr 2006	0.63	1.4	6.75	8.4	7.23	7.89	3	3	10	10	0.05	0.05	0	NR	11.5	15
May 2006	0.18	0.6	8.2	9.2	7.19	7.45	3	3	10	10	0.05	0.05	0	NR	6	12
Jun 2006	0.03	0.08	12.5	13.3	7.47	7.77	3	3	10	10	0.05	0.05	0	NR	5	5

Compliance Point 001 - A

DMR	Flow rate		Water Temperature		pH		BOD5		TSS		Ammonia-Nitrogen		Oil and grease visual	TPH	Total Recoverable Copper	
	Daily Min	Daily Max	30-Day Avg	Daily Max	Daily Min	Daily Max	30-Day Avg	Daily Max	30-Day Avg	Daily Max	30-Day Avg	Daily Max	Daily Max	Daily Max	30-Day Avg	Daily Max
	MGD	MGD	deg C	deg C	6 SU	9 SU	mg/L	mg/L	90 mg/L	158 mg/L	mg/L	mg/L	N=0;Y=1	10 mg/L	150 ug/L	300 ug/L
Jul 2006	0.01	0.02	14.4	14.5	7.46	7.55	3	3	10	10	0.05	0.05	0	NR	5	5
Aug 2006	0	0.01	13.95	14.3	7.18	7.24	3	3	10	10	0.05	0.05	0	NR	5	5
Sep 2006	0	1	9.83	11.1	7.17	7.75	3	3	10	10	0.05	0.05	0	NR	3.33	10
Oct 2006	0.05	0.05	3.4	3.4	6.96	6.96	3	3	10	10	0.05	0.05	0	NR	5	5
Nov 2006	0.04	0.04	2.3	2.3	7.67	7.67	3	3	10	10	0.05	0.05	0	NR	5	5
Dec 2006	0.02	0.02	0.6	0.6	7.28	7.28	3	3	10	10	0.05	0.05	0	NR	5	5
Jan 2007	0.01	0.01	0.3	0.3	6.88	6.88	3	3	10	10	0.05	0.05	0	NR	5	5
Feb 2007	0.01	0.01	1.6	1.6	6.81	6.81	3	3	10	10	0.05	0.05	0	NR	5	5
Mar 2007	0.43	0.43	1.8	1.8	7.32	7.32	3	3	10	10	0.05	0.05	0	NR	6	6
Apr 2007	0.26	0.38	5.55	5.9	7.08	7.7	3	3	10	10	0.05	0.05	0	NR	5	5
May 2007	0.11	0.19	9.47	9.5	7.83	7.98	3	3	10	10	0.05	0.05	0	NR	5	5
Jun 2007	0.18	7.7	9.7	10.2	7.34	7.77	3	3	37.7	113	0.05	0.05	0	NR	79.67	222
Jul 2007	0.02	0.08	15.05	15.4	7.33	7.67	3	3	10	10	0.05	0.05	0	NR	5	5
Aug 2007	0.01	0.03	14.77	15.6	7.03	7.43	3	3	10	10	0.05	0.05	0	NR	5	5
Sep 2007	0	0.01	9.55	10.2	7.45	7.54	3	3	10	10	0.05	0.05	0	NR	5	5
Oct 2007	0.01	0.01	5.9	5.9	7.5	7.5	3	3	10	10	0.05	0.05	0	NR	5	5
Nov 2007	0.01	0.01	3.5	3.5	7.16	7.16	3	3	10	10	0.05	0.05	0	NR	5	5
Dec 2007	0.01	0.01	0.9	0.9	7.11	7.11	3	3	10	10	0.05	0.05	0	NR	5	5
Jan 2008	0.01	0.01	0.2	0.2	7.1	7.1	3	3	10	10	0.05	0.05	0	NR	5	5
Feb 2008	0	0	1.2	1.2	7.09	7.09	3	3	10	10	0.05	0.05	0	NR	5	5
Mar 2008	0.01	0.01	0.4	0.4	7.23	7.23	3	3	10	10	0.05	0.05	0	NR	5	5
Apr 2008	0.23	1.05	2.65	3.1	7.14	7.44	3	3	10	10	0.05	0.05	0	NR	5	10
May 2008	0.95	2.64	7.5	9.5	7.13	7.8	3	3	7	14	0.05	0.05	0	NR	26.39	43.5

Compliance Point 001 - A

DMR	Flow rate		Water Temperature		pH		BOD5		TSS		Ammonia-Nitrogen		Oil and grease visual	TPH	Total Recoverable Copper	
	Daily Min	Daily Max	30-Day Avg	Daily Max	Daily Min	Daily Max	30-Day Avg	Daily Max	30-Day Avg	Daily Max	30-Day Avg	Daily Max	Daily Max	Daily Max	30-Day Avg	Daily Max
	MGD	MGD	deg C	deg C	6 SU	9 SU	mg/L	mg/L	90 mg/L	158 mg/L	mg/L	mg/L	N=0;Y=1	10 mg/L	150 ug/L	300 ug/L
Jun 2008	0.11	0.96	11.5	12.5	7.8	7.86	3	3	10	10	0.05	0.05	0	NR	5.85	11.9
Jul 2008	0.02	0.06	14.15	14.8	7.63	7.75	3	3	10	10	0.05	0.05	0	NR	5	5
Aug 2008	0.02	0.03	13.65	14.3	7.48	7.6	3	3	10	10	0.05	0.05	0	NR	5	5
Sep 2008	0.02	0.02	9.2	9.6	7.6	7.97	3	3	10	10	0.05	0.05	0	NR	5	5
Oct 2008	0.01	0.01	3.9	3.9	7.68	7.68	3	3	10	10	0.05	0.05	0	NR	5	5
Nov 2008	0.15	0.15	1.6	1.6	7.43	7.43	3	3	10	10	0.05	0.05	0	NR	5	5
Dec 2008	0.06	0.06	-0.2	-0.2	7.62	7.62	3	3	10	10	0.05	0.05	0	NR	5	5
Jan 2009	0.03	0.03	0.9	0.9	7.4	7.4	3	3	10	10	0.05	0.05	0	NR	5	5
Feb 2009	0.05	0.05	1.5	1.5	7.51	7.51	BD	BD	BD	BD	BD	BD	0	NR	BD	BD
Mar 2009	0.14	0.14	1.1	1.1	7.68	7.68	BD	BD	BD	BD	BD	BD	0	NR	BD	BD
Apr 2009	0.22	1.72	4.3	6.8	7.72	7.84	BD	BD	BD	BD	BD	BD	0	NR	6	12
May 2009	0.27	0.43	7.83	10.1	7.87	7.97	BD	BD	BD	BD	BD	BD	0	NR	BD	BD
Jun 2009	0.11	0.56	11.7	13.9	7.45	8	BD	BD	BD	BD	BD	BD	0	NR	BD	BD
Jul 2009	0.04	0.06	13.1	13.8	7.61	7.85	BD	BD	BD	BD	BD	BD	0	NR	BD	BD
Aug 2009	0.01	0.02	13.35	13.7	7.48	7.59	BD	BD	BD	BD	BD	BD	0	NR	BD	BD
Sep 2009	0.01	0.02	10.4	11.1	7.53	7.59	BD	BD	BD	BD	BD	BD	0	NR	BD	BD
Oct 2009	0.01	0.01	1.6	1.6	7.6	7.6	BD	BD	BD	BD	BD	BD	0	NR	BD	BD
Nov 2009	0.37	0.37	5.7	5.7	7.49	7.49	BD	BD	BD	BD	BD	BD	0	NR	BD	BD
Dec 2009	0.05	0.05	0.3	0.3	7.8	7.8	BD	BD	BD	BD	BD	BD	0	NR	BD	BD
Jan 2010	0.01	0.01	1.4	1.4	7.65	7.65	BD	BD	BD	BD	BD	BD	0	NR	BD	BD
Feb 2010	0.01	0.01	0.7	0.7	7.78	7.78	BD	BD	BD	BD	BD	BD	0	NR	BD	BD
Mar 2010	0.35	0.35	3.5	3.5	7.71	7.71	BD	BD	BD	BD	BD	BD	0	NR	BD	BD
Apr 2010	0.22	0.27	4.65	6.5	7.44	7.88	BD	BD	BD	BD	BD	BD	0	NR	6.5	7

Compliance Point 001 - A

DMR	Flow rate		Water Temperature		pH		BOD5		TSS		Ammonia-Nitrogen		Oil and grease visual	TPH	Total Recoverable Copper	
	Daily Min	Daily Max	30-Day Avg	Daily Max	Daily Min	Daily Max	30-Day Avg	Daily Max	30-Day Avg	Daily Max	30-Day Avg	Daily Max	Daily Max	Daily Max	30-Day Avg	Daily Max
	MGD	MGD	deg C	deg C	6 SU	9 SU	mg/L	mg/L	90 mg/L	158 mg/L	mg/L	mg/L	N=0;Y=1	10 mg/L	150 ug/L	300 ug/L
May 2010	0.47	1	6.85	9.6	7.81	7.82	BD	BD	BD	BD	BD	BD	0	NR	9	12
Jun 2010	0.1	0.19	11.6	15.1	7.91	7.99	BD	BD	BD	BD	BD	BD	0	NR	BD	BD
Jul 2010	0.03	0.04	13.85	14.9	7.72	7.75	BD	BD	BD	BD	BD	BD	0	NR	BD	BD
Aug 2010	0.03	0.07	13.3	13.6	7.76	7.92	BD	BD	BD	BD	BD	BD	0	NR	BD	BD
Sep 2010	ND	ND	ND	ND	ND	ND	ND	ND	ND	ND	ND	ND	ND	ND	ND	ND
Oct 2010	0.04	0.04	6	6	7.77	7.77	3	3	10	10	0.05	0.05	0	NR	5	5
Nov 2010	0.02	0.02	1	1	7.09	7.09	BD	BD	BD	BD	BD	BD	0	NR	BD	BD
Dec 2010	0.03	0.03	1.3	1.3	7.32	7.32	BD	BD	BD	BD	BD	BD	0	NR	BD	BD
Jan 2011	0.2	0.2	0.7	0.7	7.44	7.44	BD	BD	BD	BD	BD	BD	0	NR	BD	BD
Feb 2011	0	0	0.5	0.5	7.49	7.49	BD	BD	BD	BD	BD	BD	0	NR	BD	BD
Mar 2011	0.08	0.08	4.1	4.1	7.64	7.64	BD	BD	BD	BD	BD	BD	0	NR	BD	BD
Apr 2011	0.37	0.4	3.05	3.5	7.72	7.74	BD	BD	BD	BD	BD	BD	0	NR	BD	BD
May 2011	0.36	1.78	7.7	8.5	7.7	7.74	BD	BD	BD	BD	BD	BD	0	NR	3.67	11
Jun 2011	0.06	0.25	11.2	13.8	7.85	7.95	BD	BD	BD	BD	BD	BD	0	NR	BD	BD
Jul 2011	0.04	0.05	14.65	15.7	7.71	7.78	BD	BD	BD	BD	BD	BD	0	NR	BD	BD
Aug 2011	0.01	0.03	14.87	15.9	7.44	7.8	BD	BD	BD	BD	BD	BD	0	NR	BD	BD
Sep 2011	0.01	0.01	11.05	11.7	7.52	7.54	BD	BD	BD	BD	BD	BD	0	NR	BD	BD
Oct 2011	0.01	0.01	8.6	8.6	7.56	7.56	BD	BD	BD	BD	BD	BD	0	NR	BD	BD
Nov 2011	0	0	2.5	2.5	7.69	7.69	BD	BD	BD	BD	BD	BD	0	NR	BD	BD
Dec 2011	0.01	0.01	1.2	1.2	7.45	7.45	BD	BD	BD	BD	BD	BD	0	NR	BD	BD
Jan 2012	0.01	0.01	2.1	2.1	7.5	7.5	BD	BD	BD	BD	BD	BD	0	NR	BD	BD
Feb 2012	0.01	0.01	1.9	1.9	7.51	7.51	BD	BD	BD	BD	BD	BD	0	NR	BD	BD

Compliance Point 001 - A

DMR	Flow rate		Water Temperature		pH		BOD5		TSS		Ammonia-Nitrogen		Oil and grease visual	TPH	Total Recoverable Copper	
	Daily Min	Daily Max	30-Day Avg	Daily Max	Daily Min	Daily Max	30-Day Avg	Daily Max	30-Day Avg	Daily Max	30-Day Avg	Daily Max	Daily Max	Daily Max	30-Day Avg	Daily Max
	MGD	MGD	deg C	deg C	6 SU	9 SU	mg/L	mg/L	90 mg/L	158 mg/L	mg/L	mg/L	N=0;Y=1	10 mg/L	150 ug/L	300 ug/L
Mar 2012	0.09	0.09	1.5	1.5	7.53	7.53	BD	BD	BD	BD	BD	BD	0	NR	BD	BD
Apr 2012	0.09	0.15	7.75	9.4	7.67	7.87	BD	BD	BD	BD	BD	BD	0	NR	BD	BD
May 2012	0.09	0.1	8.5	9.1	7.67	7.78	BD	BD	BD	BD	BD	BD	0	NR	BD	BD
Jun 2012	0.02	0.04	12.95	13.3	7.44	7.65	BD	BD	BD	BD	BD	BD	0	NR	BD	BD
Jul 2012	0.01	0.01	15.05	15.2	7.32	7.39	BD	BD	BD	BD	BD	BD	0	NR	BD	BD
Aug 2012	0	0.01	14.73	15.4	7.23	7.33	BD	BD	BD	BD	BD	BD	0	NR	BD	BD
Sep 2012	0	0	12.35	12.9	7.18	7.27	BD	BD	BD	BD	BD	BD	0	NR	BD	BD
Oct 2012	0	0	10.1	10.1	7.3	7.3	BD	BD	BD	BD	BD	BD	0	NR	BD	BD
Nov 2012	0	0	6.4	6.4	7.53	7.53	BD	BD	BD	BD	BD	BD	0	NR	BD	BD
Dec 2012	0	0	3.9	3.9	7.64	7.64	BD	BD	BD	BD	BD	BD	0	NR	BD	BD
Jan 2013	0	0	1.8	1.8	7.68	7.68	BD	BD	BD	BD	BD	BD	0	NR	BD	BD
Feb 2013	0	0	1.9	1.9	7.69	7.69	BD	BD	BD	BD	BD	BD	0	NR	BD	BD
Mar 2013	0.01	0.01	1.2	1.2	7.65	7.65	BD	BD	BD	BD	BD	BD	0	NR	BD	BD
Apr 2013	0.12	0.15	2.5	2.6	7.74	7.85	BD	BD	BD	BD	BD	BD	0	NR	BD	BD
May 2013	0.26	2.24	8.1	8.8	7.66	7.73	BD	BD	BD	BD	BD	BD	0	NR	7	14
Jun 2013	0.13	1.75	12.23	14.6	7.82	7.99	BD	BD	BD	BD	BD	BD	0	NR	3	9
Jul 2013	0.01	0.06	14.8	15.5	7.72	7.87	BD	BD	BD	BD	BD	BD	0	NR	BD	BD
Aug 2013	0.01	0.03	14.8	14.9	7.71	7.74	BD	3	BD	10	BD	0.05	0	NR	BD	5
Sep 2013	0.02	0.02	14.2	15.8	7.65	7.79	BD	3	BD	10	BD	0.05	0	NR	BD	5
Oct 2013	1.73	1.73	6.4	6.4	7.86	7.86	BD	3	BD	10	BD	0.05	0	NR	16	16
Nov 2013	0.21	0.21	5	5	7.96	7.96	BD	3	BD	10	BD	0.05	0	NR	BD	5
Dec 2013	0.05	0.05	1.4	1.4	7.97	7.97	BD	3	BD	10	BD	0.05	0	NR	BD	5
Jan 2014	0.04	0.04	0.4	0.4	7.93	7.93	BD	3	BD	10	BD	0.05	0	NR	BD	5

Compliance Point 001 - A

DMR	Flow rate		Water Temperature		pH		BOD5		TSS		Ammonia-Nitrogen		Oil and grease visual	TPH	Total Recoverable Copper	
	Daily Min	Daily Max	30-Day Avg	Daily Max	Daily Min	Daily Max	30-Day Avg	Daily Max	30-Day Avg	Daily Max	30-Day Avg	Daily Max	Daily Max	Daily Max	30-Day Avg	Daily Max
	MGD	MGD	deg C	deg C	6 SU	9 SU	mg/L	mg/L	90 mg/L	158 mg/L	mg/L	mg/L	N=0;Y=1	10 mg/L	150 ug/L	300 ug/L
Feb 2014	0.02	0.02	0.3	0.3	7.91	7.91	BD	3	BD	10	BD	0.05	0	NR	BD	5
Mar 2014	0.22	0.22	1.6	1.6	7.93	7.93	BD	3	BD	10	BD	0.05	0	NR	BD	5
Apr 2014	0.41	0.48	4.5	6.5	7.78	7.94	BD	3	BD	10	BD	0.05	0	NR	3	6
May 2014	0.26	2.3	7.4	7.5	7.76	7.88	BD	3	BD	10	BD	0.05	0	NR	5.5	11
Jun 2014	0.08	0.1	10.8	11	7.86	7.87	BD	3	BD	10	BD	0.05	0	NR	BD	5
Jul 2014	0.03	0.06	12.57	13.5	7.81	7.93	BD	3	BD	10	BD	0.05	0	NR	BD	5
Aug 2014	0.01	0.02	13.9	14.4	7.68	7.76	BD	3	BD	10	BD	0.05	0	NR	BD	5
Sep 2014	0.01	0.01	11.05	12.1	7.71	7.71	BD	3	BD	10	BD	0.05	0	NR	BD	5
Oct 2014	0.05	0.05	8.4	8.4	7.82	7.82	BD	3	BD	10	BD	0.05	0	NR	BD	5
Nov 2014	0.03	0.03	0.5	0.5	7.86	7.86	BD	3	BD	10	BD	0.05	0	NR	BD	5
Dec 2014	0.02	0.02	1.5	1.5	7.83	7.83	BD	3	BD	10	BD	0.05	0	NR	BD	5
Jan 2015	0.03	0.03	0.5	0.5	7.98	7.98	BD	3	BD	10	BD	0.05	0	NR	BD	5
Feb 2015	0.14	0.14	3.6	3.6	7.89	7.89	BD	3	BD	10	BD	0.05	0	NR	BD	5
Mar 2015	0.19	0.19	3.1	3.1	8.01	8.01	BD	3	BD	10	BD	0.05	0	NR	BD	5
Apr 2015	0.09	0.11	4.9	5.3	7.9	7.92	BD	3	BD	10	BD	0.05	0	NR	BD	5
May 2015	0.27	1	7.8	7.9	7.81	7.98	BD	3	BD	10	BD	0.05	0	NR	3	6
Jun 2015	0.2	0.92	13.53	15	7.77	7.92	BD	3	BD	10	BD	0.05	0	NR	2	6
Jul 2015	0.05	0.12	14.25	14.6	7.76	7.78	BD	3	BD	10	BD	0.05	0	NR	BD	5
Aug 2015	0.03	0.04	14.75	15.5	7.74	7.76	BD	3	BD	10	BD	0.05	0	NR	BD	5
Sep 2015	0.03	0.04	12.05	12.1	7.6	7.69	BD	3	BD	10	BD	0.05	0	NR	BD	5
Oct 2015	0.03	0.03	9.1	9.1	7.69	7.69	BD	3	BD	10	BD	0.05	0	NR	BD	5
Nov 2015	0.03	0.03	2.3	2.3	7.75	7.75	BD	3	BD	10	BD	0.05	0	NR	BD	5
Dec 2015	0.03	0.03	1.9	1.9	7.89	7.89	BD	3	BD	10	BD	0.05	0	NR	BD	5

Compliance Point 001 - A

DMR	Flow rate		Water Temperature		pH		BOD5		TSS		Ammonia-Nitrogen		Oil and grease visual	TPH	Total Recoverable Copper	
	Daily Min	Daily Max	30-Day Avg	Daily Max	Daily Min	Daily Max	30-Day Avg	Daily Max	30-Day Avg	Daily Max	30-Day Avg	Daily Max	Daily Max	Daily Max	30-Day Avg	Daily Max
	MGD	MGD	deg C	deg C	6 SU	9 SU	mg/L	mg/L	90 mg/L	158 mg/L	mg/L	mg/L	N=0;Y=1	10 mg/L	150 ug/L	300 ug/L
Jan 2016	0.02	0.02	1.6	1.6	7.72	7.72	BD	3	BD	10	BD	0.05	0	NR	BD	5
Feb 2016	0.08	0.08	2.6	2.6	7.91	7.91	BD	3	BD	10	BD	0.05	0	NR	BD	5
Mar 2016	0.14	0.14	3.6	3.6	7.79	7.79	BD	3	BD	10	BD	0.05	0	NR	BD	5
Apr 2016	0.24	0.24	4.75	5.4	7.77	7.84	BD	3	BD	10	BD	0.05	0	NR	BD	5
May 2016	0.15	0.36	9.4	9.9	7.74	7.85	BD	3	BD	10	BD	0.05	0	NR	BD	5
Jun 2016	0.02	0.07	13.93	14.7	7.71	7.88	BD	3	BD	10	BD	0.05	0	NR	BD	5
Jul 2016	0.01	0.01	13.75	14.8	7.61	7.74	BD	3	BD	10	BD	0.05	0	NR	BD	5
Aug 2016	0.01	0.01	13	14.4	7.51	7.61	BD	3	BD	10	BD	0.05	0	NR	BD	5
Sep 2016	0.01	0.01	11.45	11.8	7.42	7.54	9.8	9.8	BD	10	BD	0.05	0	NR	BD	5
Oct 2016	0.01	0.01	7.6	7.6	7.62	7.62	BD	3	BD	10	BD	0.05	0	NR	BD	5
Nov 2016	0.01	0.01	6.3	6.3	7.66	7.66	BD	3	BD	10	BD	0.05	0	NR	BD	5
Dec 2016	0	0	1.2	1.2	7.79	7.79	BD	3	BD	10	BD	0.05	0	NR	BD	5
Jan 2017	0	0	0.3	0.3	7.79	7.79	BD	3	BD	10	BD	0.05	0	NR	BD	5
Feb 2017	0	0	1.5	1.5	7.73	7.73	BD	3	BD	10	BD	0.05	0	NR	BD	5
Mar 2017	0.02	0.02	0.5	0.5	7.92	7.92	BD	3	BD	10	BD	0.05	0	NR	BD	5
Apr 2017	0.03	0.07	4.45	6.4	7.87	7.95	BD	3	BD	10	BD	0.05	0	NR	BD	5
May 2017	0.06	0.08	6.5	7.4	7.95	8.02	BD	3	BD	10	BD	0.05	0	NR	BD	5
Jun 2017	0.04	0.16	12.3	12.9	7.91	8.07	BD	3	BD	10	BD	0.05	0	NR	BD	5
Jul 2017	0.01	0.01	15.2	15.3	7.51	7.74	BD	3	BD	10	BD	0.05	0	NR	BD	5
Aug 2017	0.01	0.01	13	13.1	7.59	7.6	BD	3	BD	10	BD	0.05	0	NR	BD	5
Sep 2017	0.01	0.01	11.8	12.2	7.5	7.55	BD	3	BD	10	BD	0.05	0	NR	BD	5
Oct 2017	0.01	0.01	6.5	6.5	7.58	7.58	BD	3	BD	10	BD	0.05	0	NR	BD	5
Nov 2017	0.01	0.01	2.6	2.6	7.77	7.77	BD	3	BD	10	BD	0.05	0	NR	BD	5

Compliance Point 001 - A

DMR	Flow rate		Water Temperature		pH		BOD5		TSS		Ammonia-Nitrogen		Oil and grease visual	TPH	Total Recoverable Copper	
	Daily Min	Daily Max	30-Day Avg	Daily Max	Daily Min	Daily Max	30-Day Avg	Daily Max	30-Day Avg	Daily Max	30-Day Avg	Daily Max	Daily Max	Daily Max	30-Day Avg	Daily Max
	MGD	MGD	deg C	deg C	6 SU	9 SU	mg/L	mg/L	90 mg/L	158 mg/L	mg/L	mg/L	N=0;Y=1	10 mg/L	150 ug/L	300 ug/L
Dec 2017	0	0	1.7	1.7	7.84	7.84	BD	3	BD	10	BD	0.05	0	NR	BD	5
Jan 2018	0	0	1.8	1.8	7.72	7.72	BD	3	BD	10	BD	0.05	0	NR	BD	5
Feb 2018	0	0	1.1	1.1	7.76	7.76	BD	3	BD	10	BD	0.05	0	NR	BD	5
Mar 2018	0.03	0.03	1.7	1.7	7.78	7.78	BD	3	BD	10	BD	0.05	0	NR	BD	5
Apr 2018	0.11	0.28	3.45	4	7.84	7.97	BD	3	BD	10	BD	0.05	0	NR	BD	5
May 2018	0.1	0.3	10.1	12.4	7.92	7.98	BD	3	BD	10	BD	0.05	0	NR	BD	5
Jun 2018	0.06	0.75	13.95	14.1	7.81	7.97	BD	3	BD	10	BD	0.05	0	NR	3	6
Jul 2018	0.15	0.17	16.7	17.7	7.93	7.96	BD	3	BD	10	BD	0.05	0	NR	BD	5
Aug 2018	0.04	0.05	15.75	16.9	7.86	7.92	BD	3	BD	10	BD	0.05	0	NR	BD	5
Sep 2018	0.01	0.03	13.75	13.8	7.76	7.8	BD	3	BD	10	BD	0.05	0	NR	BD	5
Oct 2018	0.02	0.02	3.9	3.9	7.87	7.87	BD	3	BD	10	BD	0.05	0	NR	BD	5
Nov 2018	0.02	0.02	1	1	7.81	7.81	BD	3	BD	10	BD	0.05	0	NR	BD	5
Dec 2018	0.02	0.02	0.2	0.2	7.8	7.8	BD	3	BD	10	BD	0.05	0	NR	BD	5
Jan 2019	0.01	0.01	0.6	0.6	7.84	7.84	BD	3	BD	10	BD	0.05	0	NR	BD	5
Feb 2019	0.02	0.02	0.1	0.1	7.85	7.85	BD	3	BD	10	BD	0.05	0	NR	BD	5
Mar 2019	0.01	0.01	0.2	0.2	7.82	7.82	BD	3	BD	10	BD	0.05	0	NR	BD	5
Apr 2019	0.31	0.64	5.75	6.4	7.62	7.72	BD	3	BD	10	BD	0.05	0	NR	BD	5
May 2019	0.22	0.25	5.95	6.5	7.66	7.79	BD	3	BD	10	BD	0.05	0	NR	BD	5
Jun 2019	0.12	0.31	10.9	11.9	7.83	7.97	BD	3	BD	10	BD	0.05	0	NR	BD	5
Jul 2019	0.09	0.15	14.75	15.7	7.84	7.98	BD	3	BD	10	BD	0.05	0	NR	BD	5
Aug 2019	0.04	0.04	14.15	15.3	7.72	7.82	BD	3	BD	10	BD	0.05	0	NR	BD	5
Sep 2019	0.02	0.02	11.8	13.7	7.64	7.74	BD	3	BD	10	BD	0.05	0	NR	BD	5
Oct 2019	0.02	0.02	4.6	4.6	7.82	7.82	BD	3	BD	10	BD	0.05	0	NR	BD	5

Compliance Point 001 - A

DMR	Flow rate		Water Temperature		pH		BOD5		TSS		Ammonia-Nitrogen		Oil and grease visual	TPH	Total Recoverable Copper	
	Daily Min	Daily Max	30-Day Avg	Daily Max	Daily Min	Daily Max	30-Day Avg	Daily Max	30-Day Avg	Daily Max	30-Day Avg	Daily Max	Daily Max	Daily Max	30-Day Avg	Daily Max
	MGD	MGD	deg C	deg C	6 SU	9 SU	mg/L	mg/L	90 mg/L	158 mg/L	mg/L	mg/L	N=0;Y=1	10 mg/L	150 ug/L	300 ug/L
Nov 2019	0.12	0.12	4.7	4.7	7.83	7.83	BD	3	BD	10	BD	0.05	0	NR	BD	5
Dec 2019	0.08	0.08	2.5	2.5	7.7	7.7	BD	3	BD	10	BD	0.05	0	NR	BD	5
Jan 2020	0.04	0.04	0.4	0.4	7.8	7.8	BD	3	BD	10	BD	0.05	0	NR	BD	5
Feb 2020	0.03	0.03	1.9	1.9	7.53	7.53	BD	3	BD	10	BD	0.05	0	NR	BD	5
Mar 2020	0.38	0.38	2	2	7.69	7.69	BD	3	BD	10	BD	0.05	0	NR	BD	5
Apr 2020	0.49	0.97	4.3	4.3	7.49	7.69	BD	3	BD	10	BD	0.05	0	NR	2.5	5
May 2020	0.18	0.24	8.5	10.3	7.96	8	BD	3	BD	10	BD	0.05	0	NR	BD	5
Jun 2020	0.02	0.06	13.1	14.7	7.74	7.82	BD	3	BD	10	BD	0.05	0	NR	BD	5
Jul 2020	0	0.02	13.55	14.3	7.55	7.78	BD	3	BD	10	BD	0.05	0	NR	BD	5
Aug 2020	0	0	14.55	15	7.48	7.69	BD	3	BD	10	BD	0.05	0	NR	BD	5
Sep 2020	0.01	0.01	9.1	10.4	7.48	7.58	BD	3	BD	10	BD	0.05	0	NR	BD	5
Oct 2020	0	0	8.5	8.5	7.55	7.55	BD	3	BD	10	BD	0.05	0	NR	BD	5
Nov 2020	0	0	1.4	1.4	7.37	7.37	BD	3	BD	10	BD	0.05	0	NR	BD	5
Dec 2020	0	0	2.4	2.4	7.29	7.29	BD	3	BD	10	BD	0.05	0	NR	BD	5
Jan 2021	0	0	0.8	0.8	7.75	7.75	BD	3	BD	10	BD	0.05	0	NR	BD	5
Feb 2021	0	0	0.2	0.2	7.67	7.67	BD	3	BD	10	BD	0.05	0	NR	BD	5
Mar 2021	0	0	1.6	1.6	7.53	7.53	BD	3	BD	10	BD	0.05	0	NR	BD	5
Apr 2021	0.02	0.07	2.5	2.5	7.36	7.74	BD	3	BD	10	BD	0.05	0	NR	BD	5
May 2021	0.08	0.15	7.45	8.1	7.71	7.85	BD	3	BD	10	BD	0.05	0	NR	BD	5
Jun 2021	0.01	0.08	13.1	14.9	7.52	7.78	BD	3	BD	10	BD	0.05	0	NR	BD	5
Jul 2021	0.01	0.01	14.7	15.4	7.28	7.31	5.6	5.6	BD	10	BD	0.05	0	NR	BD	5
Aug 2021	0	0	13.3	13.9	7.28	7.35	BD	3	BD	10	BD	0.05	0	NR	BD	5
Sep 2021	0	0	11.2	11.2	7.22	7.22	BD	3	BD	10	BD	0.05	0	NR	BD	5

Compliance Point 001 - A

DMR	Flow rate		Water Temperature		pH		BOD5		TSS		Ammonia-Nitrogen		Oil and grease visual	TPH	Total Recoverable Copper	
	Daily Min	Daily Max	30-Day Avg	Daily Max	Daily Min	Daily Max	30-Day Avg	Daily Max	30-Day Avg	Daily Max	30-Day Avg	Daily Max	Daily Max	Daily Max	30-Day Avg	Daily Max
	MGD	MGD	deg C	deg C	6 SU	9 SU	mg/L	mg/L	90 mg/L	158 mg/L	mg/L	mg/L	N=0;Y=1	10 mg/L	150 ug/L	300 ug/L
Oct 2021	0	0	9.1	9.1	7.54	7.54	BD	3	BD	10	BD	0.05	0	NR	BD	5
Nov 2021	0.02	0.02	1.7	1.7	7.48	7.48	BD	3	BD	10	BD	0.05	0	NR	BD	5
Dec 2021	0.01	0.01	2	2	7.37	7.37	BD	3	BD	10	BD	0.05	0	NR	BD	5
Jan 2022	0	0	0.8	0.8	7.51	7.51	BD	3	BD	10	BD	0.05	0	NR	BD	5
Feb 2022	0	0	1	1	7.48	7.48	BD	3	BD	10	BD	0.05	0	NR	BD	5
Mar 2022	0.02	0.02	1	1	7.54	7.54	BD	3	BD	10	BD	0.05	0	NR	BD	5
Apr 2022	0.02	0.04	4.25	6.9	7.2	7.43	BD	3	BD	10	BD	0.05	0	NR	BD	5
May 2022	0.17	0.93	8.5	9.8	7.55	7.73	BD	3	BD	10	BD	0.05	0	NR	3	6
Jun 2022	0.11	2.27	10.71	13.9	7.23	7.62	BD	3	BD	10	BD	0.05	0	NR	4.33	13
Jul 2022	0	0.03	17.4	17.9	7.35	7.45	BD	3	BD	10	BD	0.05	0	NR	BD	5
Aug 2022	0	0	15.35	17.1	7.18	7.41	BD	3	BD	10	BD	0.05	0	NR	BD	5
Sep 2022	0	0.01	13.65	15.6	7.32	7.5	BD	3	BD	10	BD	BD	0	NR	BD	5
Oct 2022	0.01	0.01	11.5	11.5	7.06	7.06	BD	3	BD	10	BD	BD	0	NR	BD	5
Nov 2022	0	0	3.4	3.4	7.3	7.3	BD	3	BD	10	BD	BD	0	NR	BD	5
Dec 2022	0	0	4.1	4.1	7.27	7.27	BD	3	BD	10	BD	BD	0	NR	BD	5

Compliance Point 001 - A

DMR	WAD Cyanide		Total Recoverable Chromium		Nitrate-Nitrogen		Total Recoverable Nickel		Total Hardness		Total Recoverable Lead		Total Recoverable Silver		Total Recoverable Zinc		Total Recoverable Cadmium	
	30-Day Avg	Daily Max	30-Day Avg	Daily Max	30-Day Avg	Daily Max	30-Day Avg	Daily Max	30-Day Avg	Daily Min	30-Day Avg	Daily Max	30-Day Avg	Daily Max	30-Day Avg	Daily Max	30-Day Avg	Daily Max
	ug/L	22 ug/L	ug/L	ug/L	mg/L	mg/L	ug/L	ug/L	mg/L	mg/L	300 ug/L	600 ug/L	ug/L	ug/L	750 ug/L	1500 ug/L	50 ug/L	100 ug/L
Jul 2005	0	10	0	1	0	0.05	8.5	9	364.5	AR	0	1	0	1	0	50	0	1
Aug 2005	0	10	0	1	0	0.05	7.5	8	468.5	AR	0	1	0	1	0	50	0	1
Sep 2005	0	10	0	1	0.02	0.06	8.67	11	485.3	AR	0	1	0	1	0	50	0	1
Oct 2005	BD	BD	BD	BD	BD	BD	15	15	497	AR	BD	BD	BD	BD	BD	BD	BD	BD
Nov 2005	10	10	1	1	0.05	0.05	6	6	454	454	1	1	1	1	50	50	1	1
Dec 2005	10	10	1	1	0.05	0.05	6	6	467	467	1	1	1	1	50	50	1	1
Jan 2006	10	10	1	1	0.16	0.16	6	6	459	459	1	1	1	1	50	50	1	1
Feb 2006	10	10	1	1	0.31	0.31	5	5	480	480	1	1	1	1	50	50	1	1
Mar 2006	10	10	1	1	0.51	0.51	6	6	401	401	1	1	1	1	50	50	1	1
Apr 2006	10	10	0.5	1	1.33	1.36	57.5	72	309.5	309	1	1	1	1	50	50	2.5	3
May 2006	10	10	1	1	1	1.18	52.5	90	307.5	304	1	1	1	1	25	50	2.5	5
Jun 2006	10	10	1	1	0.33	0.55	8.33	10	452.7	344	1	1	1	1	50	50	1	1
Jul 2006	10	10	1	1	0.05	0.05	7.5	9	388	386	1	1	1	1	50	50	1	1
Aug 2006	10	10	1	1	0.05	0.05	7.5	8	391.5	378	1	1	1	1	50	50	1	1
Sep 2006	10	10	1	1	0.34	1.01	19	45	363	313	1	1	1	1	50	50	0.67	2
Oct 2006	10	10	1	1	0.47	0.47	5	5	405	405	1	1	1	1	50	50	1	1
Nov 2006	10	10	1	1	0.45	0.45	7	7	345	345	1	1	1	1	50	50	1	1
Dec 2006	10	10	1	1	0.42	0.42	8	8	439	439	1	1	1	1	50	50	1	1
Jan 2007	10	10	1	1	0.35	0.35	10	10	502	502	1	1	1	1	50	50	1	1
Feb 2007	10	10	1	1	0.32	0.32	7	7	441	441	1	1	1	1	50	50	1	1
Mar 2007	10	10	1	1	0.9	0.9	15	15	266	266	1	1	1	1	50	50	1	1
Apr 2007	10	10	1	1	0.82	0.84	13	16	268	255	1	1	0.5	1	50	50	1	1
May 2007	10	10	1	1	0.51	0.66	6.67	8	247	234	1	1	1	1	50	50	1	1

Compliance Point 001 - A

DMR	WAD Cyanide		Total Recoverable Chromium		Nitrate-Nitrogen		Total Recoverable Nickel		Total Hardness		Total Recoverable Lead		Total Recoverable Silver		Total Recoverable Zinc		Total Recoverable Cadmium	
	30-Day Avg	Daily Max	30-Day Avg	Daily Max	30-Day Avg	Daily Max	30-Day Avg	Daily Max	30-Day Avg	Daily Min	30-Day Avg	Daily Max	30-Day Avg	Daily Max	30-Day Avg	Daily Max	30-Day Avg	Daily Max
	ug/L	22 ug/L	ug/L	ug/L	mg/L	mg/L	ug/L	ug/L	mg/L	mg/L	300 ug/L	600 ug/L	ug/L	ug/L	750 ug/L	1500 ug/L	50 ug/L	100 ug/L
Jun 2007	10	10	15.67	47	0.91	1.09	113	251	272.7	224	17	51	1	3	102.33	248	6.67	15
Jul 2007	10	10	1	1	0.18	0.35	7.5	9	361.5	356	1	1	1	1	50	50	1	1
Aug 2007	10	10	1	1	0.05	0.05	6.67	7	362.7	301	1	1	1	1	18.33	55	1	1
Sep 2007	10	10	1	1	0.05	0.05	5	5	361.5	358	1	1	1	1	50	50	1	1
Oct 2007	10	10	1	1	0.05	0.05	5	5	358	358	1	1	1	1	50	50	1	1
Nov 2007	10	10	1	1	0.05	0.05	5	5	333	333	1	1	1	1	50	50	1	1
Dec 2007	10	10	1	1	0.15	0.15	5	5	349	349	1	1	1	1	50	50	1	1
Jan 2008	10	10	1	1	0.11	0.11	5	5	306	306	1	1	1	1	50	50	1	1
Feb 2008	10	10	1	1	0.11	0.11	5	5	344	344	1	1	1	1	50	50	1	1
Mar 2008	10	10	1	1	0.34	0.34	6	6	335	335	1	1	1	1	50	50	1	1
Apr 2008	10	10	1	1	1.09	1.09	26.5	35	291.5	259	1	1	1	1	40.5	81	1	2
May 2008	10	10	0.99	1.98	0.86	0.99	56.05	73.2	208.5	202	1.04	2.08	1	1	34.75	69.5	3.17	4.26
Jun 2008	10	10	1	1	0.62	0.78	25.85	34.9	233.7	195	1	1	1	1	24.37	73.1	1.28	1.95
Jul 2008	10	10	1	1	0.1	0.2	6.5	8	308.5	304	1	1	1	1	50	50	1	1
Aug 2008	BD	BD	1	1	0.03	0.06	5.5	6	297.5	295	1	1	1	1	50	50	1	1
Sep 2008	BD	BD	1	1	0.55	1.09	2.5	5	303.5	301	1	1	1	1	50	50	1	1
Oct 2008	BD	BD	1	1	0.05	0.05	5	5	329	329	1	1	1	1	50	50	1	1
Nov 2008	BD	BD	1	1	0.41	0.41	11	11	222	222	1	1	1	1	50	50	1	1
Dec 2008	BD	BD	1	1	0.42	0.42	8	8	312	312	1	1	1	1	50	50	1	1
Jan 2009	BD	BD	1	1	0.31	0.31	6	6	321	321	1	1	1	1	50	50	1	1
Feb 2009	BD	BD	BD	BD	0.47	0.47	9	9	310	310	BD	BD	BD	BD	BD	BD	BD	BD
Mar 2009	BD	BD	BD	BD	0.72	0.72	10	10	253	253	BD	BD	BD	BD	BD	BD	BD	BD
Apr 2009	BD	BD	BD	BD	0.77	0.78	30.5	43	220.5	212	BD	BD	BD	BD	30	60	1	2

Compliance Point 001 - A

DMR	WAD Cyanide		Total Recoverable Chromium		Nitrate-Nitrogen		Total Recoverable Nickel		Total Hardness		Total Recoverable Lead		Total Recoverable Silver		Total Recoverable Zinc		Total Recoverable Cadmium	
	30-Day Avg	Daily Max	30-Day Avg	Daily Max	30-Day Avg	Daily Max	30-Day Avg	Daily Max	30-Day Avg	Daily Min	30-Day Avg	Daily Max	30-Day Avg	Daily Max	30-Day Avg	Daily Max	30-Day Avg	Daily Max
	ug/L	22 ug/L	ug/L	ug/L	mg/L	mg/L	ug/L	ug/L	mg/L	mg/L	300 ug/L	600 ug/L	ug/L	ug/L	750 ug/L	1500 ug/L	50 ug/L	100 ug/L
May 2009	BD	BD	BD	BD	0.4	0.43	8	9	204	191	BD	BD	BD	BD	17.33	52	BD	BD
Jun 2009	BD	BD	BD	BD	0.31	0.4	9.33	16	242.7	220	BD	BD	BD	BD	BD	BD	BD	BD
Jul 2009	BD	BD	BD	BD	0.09	0.12	11	16	293.5	292	BD	BD	BD	BD	BD	BD	BD	BD
Aug 2009	BD	BD	BD	BD	BD	BD	6	7	298.5	291	BD	BD	BD	BD	BD	BD	BD	BD
Sep 2009	BD	BD	BD	BD	BD	BD	3	6	318	316	BD	BD	BD	BD	BD	BD	BD	BD
Oct 2009	BD	BD	BD	BD	BD	BD	BD	BD	297	297	BD	BD	BD	BD	BD	BD	BD	BD
Nov 2009	BD	BD	BD	BD	0.72	0.72	12	12	269	269	BD	BD	BD	BD	BD	BD	BD	BD
Dec 2009	BD	BD	BD	BD	0.48	0.05	7	7	349	349	BD	BD	BD	BD	BD	BD	BD	BD
Jan 2010	BD	BD	BD	BD	0.3	0.3	BD	BD	335	335	BD	BD	BD	BD	BD	BD	BD	BD
Feb 2010	BD	BD	BD	BD	0.33	0.33	5	5	334	334	BD	BD	BD	BD	BD	BD	BD	BD
Mar 2010	BD	BD	BD	BD	0.95	0.95	9	9	251	251	BD	BD	BD	BD	BD	BD	BD	BD
Apr 2010	BD	BD	BD	BD	0.77	0.94	18.5	20	210.5	184	BD	BD	BD	BD	BD	BD	BD	BD
May 2010	BD	BD	BD	BD	0.75	0.78	27	33	203	195	BD	BD	BD	BD	BD	BD	1.5	2
Jun 2010	BD	BD	BD	BD	0.38	0.44	7.67	9	211.3	187	BD	BD	BD	BD	17.67	53	BD	BD
Jul 2010	BD	BD	BD	BD	0.13	0.18	75	8	276	268	BD	BD	BD	BD	BD	BD	0.5	1
Aug 2010	BD	BD	BD	BD	0.05	0.1	6.5	7	273.5	272	BD	BD	BD	BD	61	68	BD	BD
Sep 2010	ND	ND	ND	ND	ND	ND	ND	ND	ND	ND	ND	ND	ND	ND	ND	ND	ND	ND
Oct 2010	10	10	1	1	0.18	0.18	5	5	284	284	1	1	1	1	50	50	1	1
Nov 2010	BD	BD	BD	BD	0.13	0.13	6	6	286	286	BD	BD	BD	BD	BD	BD	BD	BD
Dec 2010	BD	BD	BD	BD	0.18	0.18	6	6	307	307	BD	BD	BD	BD	BD	BD	BD	BD
Jan 2011	BD	BD	BD	BD	0.28	0.28	5	5	320	320	BD	BD	BD	BD	BD	BD	BD	BD
Feb 2011	BD	BD	BD	BD	0.47	0.47	6	6	331	331	BD	BD	BD	BD	BD	BD	BD	BD
Mar 2011	BD	BD	BD	BD	0.82	0.82	6	6	237	237	BD	BD	BD	BD	BD	BD	BD	BD

Compliance Point 001 - A

DMR	WAD Cyanide		Total Recoverable Chromium		Nitrate-Nitrogen		Total Recoverable Nickel		Total Hardness		Total Recoverable Lead		Total Recoverable Silver		Total Recoverable Zinc		Total Recoverable Cadmium	
	30-Day Avg	Daily Max	30-Day Avg	Daily Max	30-Day Avg	Daily Max	30-Day Avg	Daily Max	30-Day Avg	Daily Min	30-Day Avg	Daily Max	30-Day Avg	Daily Max	30-Day Avg	Daily Max	30-Day Avg	Daily Max
	ug/L	22 ug/L	ug/L	ug/L	mg/L	mg/L	ug/L	ug/L	mg/L	mg/L	300 ug/L	600 ug/L	ug/L	ug/L	750 ug/L	1500 ug/L	50 ug/L	100 ug/L
Apr 2011	BD	BD	BD	BD	0.89	0.94	9	9	227	217	BD	BD	BD	BD	BD	BD	BD	BD
May 2011	BD	BD	BD	BD	0.74	0.92	25.67	44	212.7	205	BD	BD	BD	BD	BD	BD	1.33	3
Jun 2011	BD	BD	BD	BD	0.48	0.55	7	8	235	231	BD	BD	BD	BD	BD	BD	BD	BD
Jul 2011	BD	BD	BD	BD	0.12	0.14	5	5	281.5	265	BD	BD	BD	BD	BD	BD	BD	BD
Aug 2011	BD	BD	BD	BD	BD	BD	3.67	6	298	284	BD	BD	BD	BD	BD	BD	BD	BD
Sep 2011	BD	BD	BD	BD	BD	BD	6	6	294.5	290	BD	BD	BD	BD	BD	BD	BD	BD
Oct 2011	BD	BD	BD	BD	BD	BD	6	6	302	302	BD	BD	BD	BD	BD	BD	BD	BD
Nov 2011	BD	BD	BD	BD	BD	BD	5	5	296	296	BD	BD	BD	BD	BD	BD	BD	BD
Dec 2011	BD	BD	BD	BD	BD	BD	BD	BD	295	295	BD	BD	BD	BD	BD	BD	BD	BD
Jan 2012	BD	BD	BD	BD	BD	BD	BD	BD	315	315	BD	BD	BD	BD	BD	BD	BD	BD
Feb 2012	BD	BD	BD	BD	0.23	0.23	BD	BD	366	366	BD	BD	BD	BD	BD	BD	BD	BD
Mar 2012	BD	BD	BD	BD	1.1	1.1	6	6	290	290	BD	BD	BD	BD	17	17	BD	BD
Apr 2012	BD	BD	BD	BD	0.53	0.58	5.5	6	270.5	261	BD	BD	BD	BD	BD	BD	BD	BD
May 2012	BD	BD	BD	BD	0.25	0.31	3	6	267	258	BD	BD	BD	BD	BD	BD	BD	BD
Jun 2012	BD	BD	BD	BD	BD	BD	7	7	313.5	303	BD	BD	BD	BD	BD	BD	BD	BD
Jul 2012	BD	BD	BD	BD	0.03	0.07	7.5	8	356.5	343	BD	BD	BD	BD	BD	BD	BD	BD
Aug 2012	BD	BD	BD	BD	BD	BD	8	9	382.3	368	BD	BD	BD	BD	BD	BD	BD	BD
Sep 2012	BD	BD	BD	BD	BD	BD	7	7	383	382	BD	BD	BD	BD	BD	BD	BD	BD
Oct 2012	BD	BD	BD	BD	BD	BD	8	8	384	384	BD	BD	BD	BD	BD	BD	BD	BD
Nov 2012	BD	BD	BD	BD	BD	BD	BD	BD	384	384	BD	BD	BD	BD	BD	BD	BD	BD
Dec 2012	BD	BD	BD	BD	BD	BD	10	10	384	384	BD	BD	BD	BD	BD	BD	BD	BD
Jan 2013	BD	BD	BD	BD	BD	BD	BD	BD	376	376	BD	BD	BD	BD	BD	BD	10	10

Compliance Point 001 - A

DMR	WAD Cyanide		Total Recoverable Chromium		Nitrate-Nitrogen		Total Recoverable Nickel		Total Hardness		Total Recoverable Lead		Total Recoverable Silver		Total Recoverable Zinc		Total Recoverable Cadmium	
	30-Day Avg	Daily Max	30-Day Avg	Daily Max	30-Day Avg	Daily Max	30-Day Avg	Daily Max	30-Day Avg	Daily Min	30-Day Avg	Daily Max	30-Day Avg	Daily Max	30-Day Avg	Daily Max	30-Day Avg	Daily Max
	ug/L	22 ug/L	ug/L	ug/L	mg/L	mg/L	ug/L	ug/L	mg/L	mg/L	300 ug/L	600 ug/L	ug/L	ug/L	750 ug/L	1500 ug/L	50 ug/L	100 ug/L
Feb 2013	BD	BD	BD	BD	BD	BD	5	5	393	393	BD	BD	BD	BD	BD	BD	BD	BD
Mar 2013	BD	BD	BD	BD	BD	BD	BD	BD	390	390	BD	BD	BD	BD	BD	BD	BD	BD
Apr 2013	BD	BD	BD	BD	0.84	0.89	BD	BD	279	276	BD	BD	BD	BD	BD	BD	BD	BD
May 2013	BD	BD	0.5	1	1.06	1.15	25.5	46	245.5	236	BD	BD	BD	BD	BD	BD	1.5	3
Jun 2013	BD	BD	0.33	1	0.72	1.01	18.67	41	263.7	235	BD	BD	BD	BD	BD	BD	1	3
Jul 2013	BD	BD	BD	BD	BD	BD	6	6	322	307	BD	BD	BD	BD	BD	BD	BD	BD
Aug 2013	BD	10	BD	1	BD	0.05	7	7	327.5	327	BD	1	BD	1	BD	50	BD	1
Sep 2013	BD	10	BD	1	BD	0.05	7	7	351	348	BD	1	BD	1	BD	50	BD	1
Oct 2013	BD	10	BD	1	0.79	0.79	57	57	212	212	BD	1	BD	1	BD	50	3	3
Nov 2013	BD	10	BD	1	0.65	0.65	10	10	214	214	BD	1	BD	1	BD	50	BD	1
Dec 2013	BD	10	BD	1	0.47	0.47	6	6	279	279	BD	1	BD	1	BD	50	BD	1
Jan 2014	BD	10	BD	1	0.43	0.43	6	6	293	293	BD	1	BD	1	BD	50	BD	1
Feb 2014	BD	10	BD	1	0.33	0.33	7	7	302	302	BD	1	BD	1	BD	50	BD	1
Mar 2014	BD	10	BD	1	0.68	0.68	5	5	206	206	BD	1	BD	1	BD	50	2	2
Apr 2014	BD	10	BD	1	0.26	0.44	16	24	155	122	BD	1	BD	1	BD	50	BD	1
May 2014	BD	10	BD	1	0.5	0.63	15	23	150	144	BD	1	BD	1	BD	50	0.5	1
Jun 2014	BD	10	BD	1	0.19	0.24	5	5	210	206	BD	1	BD	1	BD	50	BD	1
Jul 2014	BD	10	BD	1	0.06	0.07	3.33	5	245.7	228	BD	1	BD	1	17.67	53	BD	1
Aug 2014	BD	10	BD	1	BD	0.05	7	8	269	264	BD	1	BD	1	BD	50	BD	1
Sep 2014	BD	10	BD	1	BD	0.05	3	6	277	271	BD	1	BD	1	BD	50	BD	1
Oct 2014	BD	10	BD	1	0.09	0.09	BD	5	266	266	BD	1	BD	1	BD	50	BD	1
Nov 2014	BD	10	BD	1	0.16	0.16	BD	5	271	271	BD	1	BD	1	BD	50	BD	1
Dec 2014	BD	10	BD	1	0.25	0.25	BD	5	278	278	BD	1	BD	1	BD	50	BD	1

Compliance Point 001 - A

DMR	WAD Cyanide		Total Recoverable Chromium		Nitrate-Nitrogen		Total Recoverable Nickel		Total Hardness		Total Recoverable Lead		Total Recoverable Silver		Total Recoverable Zinc		Total Recoverable Cadmium	
	30-Day Avg	Daily Max	30-Day Avg	Daily Max	30-Day Avg	Daily Max	30-Day Avg	Daily Max	30-Day Avg	Daily Min	30-Day Avg	Daily Max	30-Day Avg	Daily Max	30-Day Avg	Daily Max	30-Day Avg	Daily Max
	ug/L	22 ug/L	ug/L	ug/L	mg/L	mg/L	ug/L	ug/L	mg/L	mg/L	300 ug/L	600 ug/L	ug/L	ug/L	750 ug/L	1500 ug/L	50 ug/L	100 ug/L
Jan 2015	BD	10	BD	1	0.38	0.38	BD	5	271	271	BD	1	BD	1	BD	50	BD	1
Feb 2015	BD	10	BD	1	0.58	0.58	BD	5	186	186	BD	1	BD	1	BD	50	BD	1
Mar 2015	BD	10	BD	1	0.59	0.59	BD	5	197	197	BD	1	BD	1	BD	50	BD	1
Apr 2015	BD	10	BD	1	0.35	0.35	2.5	5	216.5	213	BD	1	BD	1	BD	50	BD	1
May 2015	BD	10	0.5	1	0.37	0.37	11	22	154.5	152	BD	1	BD	1	BD	50	BD	1
Jun 2015	BD	10	BD	1	0.58	0.58	7.67	23	196.7	179	BD	1	BD	1	BD	50	BD	1
Jul 2015	BD	10	BD	1	0.17	0.17	BD	5	230.5	225	BD	1	BD	1	BD	50	BD	1
Aug 2015	BD	10	BD	1	0.09	0.09	BD	5	233	228	BD	1	BD	1	BD	50	BD	1
Sep 2015	BD	10	BD	1	0.11	0.11	BD	5	254	251	BD	1	BD	1	27	54	BD	1
Oct 2015	BD	10	BD	1	BD	0.05	BD	5	262	262	BD	1	BD	1	BD	50	BD	1
Nov 2015	BD	10	BD	1	BD	0.05	BD	5	265	265	BD	1	BD	1	BD	50	BD	1
Dec 2015	BD	10	BD	1	0.13	0.13	BD	5	257	257	BD	1	BD	1	BD	50	BD	1
Jan 2016	BD	10	BD	1	0.19	0.19	BD	5	283	283	BD	1	BD	1	BD	50	BD	1
Feb 2016	BD	10	BD	1	0.58	0.58	BD	5	227	227	BD	1	BD	1	BD	50	BD	1
Mar 2016	BD	10	BD	1	0.51	0.51	6	6	239	239	BD	1	BD	1	BD	50	BD	1
Apr 2016	BD	10	BD	1	0.54	0.54	BD	5	201	199	BD	1	BD	1	26.5	53	BD	1
May 2016	BD	10	BD	1	0.35	0.35	BD	5	191.5	172	BD	1	BD	1	33	66	BD	1
Jun 2016	BD	10	BD	1	0.09	0.09	BD	5	245.7	227	BD	1	BD	1	BD	50	BD	1
Jul 2016	BD	10	BD	1	BD	0.05	BD	5	265	262	BD	1	BD	1	BD	50	BD	1
Aug 2016	BD	10	0.5	1	BD	0.05	BD	5	283.5	277	BD	1	BD	1	BD	50	BD	1
Sep 2016	BD	10	BD	1	BD	0.05	BD	5	281	281	BD	1	BD	1	BD	50	BD	1
Oct 2016	BD	10	BD	1	BD	0.05	BD	5	294	294	BD	1	BD	1	BD	50	BD	1
Nov 2016	BD	10	BD	1	BD	0.05	BD	5	296	296	BD	1	BD	1	BD	50	BD	1

Compliance Point 001 - A

DMR	WAD Cyanide		Total Recoverable Chromium		Nitrate-Nitrogen		Total Recoverable Nickel		Total Hardness		Total Recoverable Lead		Total Recoverable Silver		Total Recoverable Zinc		Total Recoverable Cadmium	
	30-Day Avg	Daily Max	30-Day Avg	Daily Max	30-Day Avg	Daily Max	30-Day Avg	Daily Max	30-Day Avg	Daily Min	30-Day Avg	Daily Max	30-Day Avg	Daily Max	30-Day Avg	Daily Max	30-Day Avg	Daily Max
	ug/L	22 ug/L	ug/L	ug/L	mg/L	mg/L	ug/L	ug/L	mg/L	mg/L	300 ug/L	600 ug/L	ug/L	ug/L	750 ug/L	1500 ug/L	50 ug/L	100 ug/L
Dec 2016	BD	10	BD	1	0.24	0.24	BD	5	298	298	BD	1	BD	1	BD	50	BD	1
Jan 2017	BD	10	BD	1	0.13	0.13	BD	5	300	300	BD	1	BD	1	BD	50	BD	1
Feb 2017	BD	10	BD	1	0.16	0.16	BD	5	311	311	BD	1	BD	1	BD	50	BD	1
Mar 2017	BD	10	BD	1	0.38	0.38	BD	5	298	298	BD	1	BD	1	BD	50	BD	1
Apr 2017	BD	10	BD	1	BD	0.05	BD	5	257	243	BD	1	BD	1	BD	50	BD	1
May 2017	BD	10	BD	1	BD	0.05	BD	5	257	257	BD	1	BD	1	BD	50	BD	1
Jun 2017	BD	10	BD	1	BD	0.05	BD	5	259	227	BD	1	BD	1	BD	50	BD	1
Jul 2017	BD	10	BD	1	BD	0.05	3	6	285.5	276	BD	1	BD	1	BD	50	BD	1
Aug 2017	BD	10	BD	1	BD	0.05	BD	5	310	310	BD	1	BD	1	BD	50	BD	1
Sep 2017	BD	10	BD	1	BD	0.05	BD	5	313.5	312	BD	1	BD	1	BD	50	BD	1
Oct 2017	BD	10	BD	1	BD	0.05	5	5	322	322	BD	1	BD	1	BD	50	BD	1
Nov 2017	BD	10	BD	1	BD	0.05	BD	5	318	318	BD	1	BD	1	BD	50	BD	1
Dec 2017	BD	10	BD	1	BD	0.05	BD	5	306	306	BD	1	BD	1	BD	50	BD	1
Jan 2018	BD	10	BD	1	BD	0.05	BD	5	321	321	BD	1	BD	1	BD	50	BD	1
Feb 2018	BD	10	BD	1	BD	0.05	BD	5	326	326	BD	1	BD	1	BD	50	BD	1
Mar 2018	BD	10	BD	1	0.49	0.49	BD	5	277	277	BD	1	BD	1	BD	50	BD	1
Apr 2018	BD	10	BD	1	0.61	0.61	2.5	5	213	191	BD	1	BD	1	BD	50	BD	1
May 2018	BD	10	BD	1	0.42	0.42	BD	5	204	196	BD	1	BD	1	26.3	79	BD	1
Jun 2018	BD	10	BD	1	0.08	0.08	10	20	208	184	BD	1	BD	1	BD	50	BD	1
Jul 2018	BD	10	BD	1	0.22	0.22	3	6	215	208	BD	1	BD	1	BD	50	BD	1
Aug 2018	BD	10	BD	1	0.07	0.07	BD	5	237.5	232	BD	1	BD	1	BD	50	BD	1
Sep 2018	BD	10	BD	1	0.05	0.05	BD	5	261.5	245	BD	1	BD	1	BD	50	BD	1
Oct 2018	BD	10	BD	1	BD	0.05	BD	5	265	265	BD	1	BD	1	BD	50	BD	1

Compliance Point 001 - A

DMR	WAD Cyanide		Total Recoverable Chromium		Nitrate-Nitrogen		Total Recoverable Nickel		Total Hardness		Total Recoverable Lead		Total Recoverable Silver		Total Recoverable Zinc		Total Recoverable Cadmium	
	30-Day Avg	Daily Max	30-Day Avg	Daily Max	30-Day Avg	Daily Max	30-Day Avg	Daily Max	30-Day Avg	Daily Min	30-Day Avg	Daily Max	30-Day Avg	Daily Max	30-Day Avg	Daily Max	30-Day Avg	Daily Max
	ug/L	22 ug/L	ug/L	ug/L	mg/L	mg/L	ug/L	ug/L	mg/L	mg/L	300 ug/L	600 ug/L	ug/L	ug/L	750 ug/L	1500 ug/L	50 ug/L	100 ug/L
Nov 2018	BD	10	BD	1	0.15	0.15	BD	5	268	268	BD	1	BD	1	BD	50	BD	1
Dec 2018	BD	10	BD	1	0.22	0.22	5	5	301	301	BD	1	BD	1	BD	50	BD	1
Jan 2019	BD	10	BD	1	0.26	0.26	BD	5	296	296	BD	1	BD	1	BD	50	BD	1
Feb 2019	BD	10	BD	1	0.33	0.33	BD	5	307	307	BD	1	BD	1	BD	50	BD	1
Mar 2019	BD	10	BD	1	0.32	0.32	BD	5	293	293	BD	1	BD	1	BD	50	BD	1
Apr 2019	BD	10	BD	1	0.69	0.69	6.5	7	174	164	BD	1	BD	1	BD	50	BD	1
May 2019	BD	10	BD	1	0.42	0.42	6	6	181.5	173	BD	1	BD	1	BD	50	BD	1
Jun 2019	BD	10	BD	1	0.53	0.53	6	8	194.7	168	BD	1	BD	1	BD	50	BD	1
Jul 2019	BD	10	BD	1	0.21	0.21	5.5	6	227.5	216	BD	1	BD	1	BD	50	BD	1
Aug 2019	BD	10	BD	1	0.08	0.08	4	8	242.5	234	BD	1	BD	1	BD	50	BD	1
Sep 2019	BD	10	BD	1	0.05	0.05	1.67	5	273.3	267	BD	1	BD	1	BD	50	BD	1
Oct 2019	BD	10	BD	1	0.08	0.08	BD	5	244	244	BD	1	BD	1	BD	50	BD	1
Nov 2019	BD	10	BD	1	0.41	0.41	6	6	197	197	BD	1	BD	1	BD	50	BD	1
Dec 2019	BD	10	BD	1	0.45	0.45	BD	5	235	235	BD	1	BD	1	BD	50	BD	1
Jan 2020	BD	10	BD	1	0.4	0.4	BD	5	264	264	BD	1	BD	1	BD	50	BD	1
Feb 2020	BD	10	BD	1	0.31	0.31	10	10	261	261	BD	1	BD	1	BD	50	BD	1
Mar 2020	BD	10	BD	1	0.69	0.69	5	5	182	182	BD	1	BD	1	BD	50	BD	1
Apr 2020	BD	10	BD	1	0.63	0.63	8.5	11	150	146	BD	1	BD	1	BD	50	BD	1
May 2020	BD	10	BD	1	0.28	0.28	3.5	7	167.5	162	BD	1	BD	1	BD	50	BD	1
Jun 2020	BD	10	BD	1	0.14	0.14	3.33	5	222.3	211	BD	1	BD	1	BD	50	BD	1
Jul 2020	BD	10	BD	1	0.08	0.08	BD	5	239	236	BD	1	BD	1	BD	50	BD	1
Aug 2020	BD	10	BD	1	0.06	0.06	5	5	256.5	256	BD	1	BD	1	BD	50	BD	1
Sep 2020	BD	10	BD	1	BD	0.05	BD	5	251	237	BD	1	BD	1	BD	50	BD	1

Compliance Point 001 - A

DMR	WAD Cyanide		Total Recoverable Chromium		Nitrate-Nitrogen		Total Recoverable Nickel		Total Hardness		Total Recoverable Lead		Total Recoverable Silver		Total Recoverable Zinc		Total Recoverable Cadmium	
	30-Day Avg	Daily Max	30-Day Avg	Daily Max	30-Day Avg	Daily Max	30-Day Avg	Daily Max	30-Day Avg	Daily Min	30-Day Avg	Daily Max	30-Day Avg	Daily Max	30-Day Avg	Daily Max	30-Day Avg	Daily Max
	ug/L	22 ug/L	ug/L	ug/L	mg/L	mg/L	ug/L	ug/L	mg/L	mg/L	300 ug/L	600 ug/L	ug/L	ug/L	750 ug/L	1500 ug/L	50 ug/L	100 ug/L
Oct 2020	BD	10	BD	1	BD	0.05	BD	5	266	266	BD	1	BD	1	BD	50	BD	1
Nov 2020	BD	10	BD	1	BD	0.05	BD	5	295	295	BD	1	BD	1	BD	50	BD	1
Dec 2020	BD	10	BD	1	BD	0.05	BD	5	290	290	BD	1	BD	1	BD	50	BD	1
Jan 2021	BD	10	BD	1	0.07	0.07	BD	5	292	292	BD	1	BD	1	BD	50	BD	1
Feb 2021	BD	10	BD	1	0.09	0.09	BD	5	297	297	BD	1	BD	1	BD	50	BD	1
Mar 2021	BD	10	BD	1	0.12	0.12	BD	5	284	284	BD	1	BD	1	BD	50	BD	1
Apr 2021	BD	10	BD	1	0.25	0.25	BD	5	218	214	BD	1	BD	1	BD	50	BD	1
May 2021	BD	10	BD	1	0.33	0.33	BD	5	187.5	181	BD	1	BD	1	BD	50	BD	1
Jun 2021	BD	10	BD	1	0.13	0.13	BD	5	227	202	BD	1	BD	1	BD	50	BD	1
Jul 2021	BD	10	BD	1	BD	0.05	BD	5	275.5	272	BD	1	BD	1	BD	50	BD	1
Aug 2021	BD	10	BD	1	BD	0.05	3	6	298.5	298	BD	1	BD	1	BD	50	BD	1
Sep 2021	BD	10	BD	1	BD	0.05	5	5	303	303	BD	1	BD	1	BD	50	BD	1
Oct 2021	BD	10	BD	1	BD	0.05	6	6	310	310	BD	1	BD	1	BD	50	1	1
Nov 2021	BD	10	1	1	0.06	0.06	BD	5	289	289	BD	1	BD	1	BD	50	BD	1
Dec 2021	BD	10	BD	1	0.06	0.06	BD	5	295	295	BD	1	BD	1	BD	50	BD	1
Jan 2022	BD	10	BD	1	0.11	0.11	BD	5	314	314	BD	1	BD	1	BD	50	BD	1
Feb 2022	BD	10	BD	1	0.12	0.12	BD	5	313	313	BD	1	BD	1	BD	50	BD	1
Mar 2022	BD	10	BD	1	0.19	0.19	BD	5	248	248	BD	1	BD	1	BD	50	BD	1
Apr 2022	BD	10	BD	1	0.11	0.11	BD	5	217.5	214	BD	1	BD	1	BD	50	BD	1
May 2022	BD	10	1	2	0.49	0.49	8.5	17	182.5	158	BD	1	BD	1	BD	50	BD	1
Jun 2022	BD	10	0.67	2	0.19	0.19	8.67	14	189.3	154	BD	1	BD	1	BD	50	BD	1
Jul 2022	BD	10	BD	1	BD	0.05	5.5	6	247	240	BD	1	BD	1	BD	50	BD	1
Aug 2022	BD	10	BD	1	BD	0.05	BD	5	272.5	269	BD	1	BD	1	BD	50	BD	1

Compliance Point 001 - A

DMR	WAD Cyanide		Total Recoverable Chromium		Nitrate-Nitrogen		Total Recoverable Nickel		Total Hardness		Total Recoverable Lead		Total Recoverable Silver		Total Recoverable Zinc		Total Recoverable Cadmium	
	30-Day Avg	Daily Max	30-Day Avg	Daily Max	30-Day Avg	Daily Max	30-Day Avg	Daily Max	30-Day Avg	Daily Min	30-Day Avg	Daily Max	30-Day Avg	Daily Max	30-Day Avg	Daily Max	30-Day Avg	Daily Max
	ug/L	22 ug/L	ug/L	ug/L	mg/L	mg/L	ug/L	ug/L	mg/L	mg/L	300 ug/L	600 ug/L	ug/L	ug/L	750 ug/L	1500 ug/L	50 ug/L	100 ug/L
Sep 2022	BD	10	BD	1	BD	0.05	3.5	7	275.5	274	BD	1	BD	1	BD	50	BD	1
Oct 2022	BD	10	BD	1	BD	0.05	5	5	279	279	BD	1	BD	1	BD	50	BD	1
Nov 2022	BD	10	BD	1	BD	0.05	BD	5	280	280	BD	1	BD	1	BD	50	BD	1
Dec 2022	BD	10	BD	1	BD	0.05	BD	5	274	274	BD	1	BD	1	BD	50	BD	1

Compliance Point 001 - A

DMR	Total Recoverable Selenium		Total Recoverable Mercury		Total Recoverable Arsenic		Total Recoverable Iron		Total Sulfate		Total Sodium		Total Recoverable Aluminum		TDS	
	30-Day Avg	Daily Max	30-Day Avg	Daily Max	30-Day Avg	Daily Max	30-Day Avg	Daily Max	30-Day Avg	Daily Max	30-Day Avg	Daily Max	30-Day Avg	Daily Max	30-Day Avg	Daily Max
	4.6 ug/L	ug/L	1 ug/L	2 ug/L	ug/L	ug/L	ug/L	ug/L	mg/L	mg/L	mg/L	mg/L	ug/L	ug/L	mg/L	mg/L
Jul 2005	0	5	0	0.2	0	5	0	50	453.5	454	41.3	43.1	29.5	34	764.5	789
Aug 2005	0	5	0	0.2	0	5	0	50	455	462	45.7	46.5	29.5	31	803	815
Sep 2005	0	5	0	0.2	0	5	147	389	452.33	464	44.5	46	105	244	786	797
Oct 2005	BD	BD	BD	BD	BD	BD	BD	BD	494	494	44.4	44.4	BD	BD	810	810
Nov 2005	BD	BD	0.2	0.2	5	5	50	50	450	450	43	43	21	21	744	744
Dec 2005	BD	BD	0.2	0.2	5	5	50	50	476	476	43.6	43.6	16	16	787	787
Jan 2006	BD	BD	0.2	0.2	5	5	50	50	483	483	37.8	37.8	18	18	763	763
Feb 2006	BD	BD	0.2	0.2	5	5	50	50	499	499	43.5	43.5	20	20	786	786
Mar 2006	BD	BD	0.2	0.2	5	5	50	50	394	394	39	39	12	12	664	664

Compliance Point 001 - A

DMR	Total Recoverable Selenium		Total Recoverable Mercury		Total Recoverable Arsenic		Total Recoverable Iron		Total Sulfate		Total Sodium		Total Recoverable Aluminum		TDS	
	30-Day Avg	Daily Max	30-Day Avg	Daily Max	30-Day Avg	Daily Max	30-Day Avg	Daily Max	30-Day Avg	Daily Max	30-Day Avg	Daily Max	30-Day Avg	Daily Max	30-Day Avg	Daily Max
	4.6 ug/L	ug/L	1 ug/L	2 ug/L	ug/L	ug/L	ug/L	ug/L	mg/L	mg/L	mg/L	mg/L	ug/L	ug/L	mg/L	mg/L
Apr 2006	BD	BD	0.2	0.2	5	5	173	263	328.5	337	38.45	41.3	414	550	546.5	557
May 2006	BD	BD	0.2	0.2	5	5	58.5	117	310	332	23.1	23.6	294.5	492	520.5	544
Jun 2006	BD	5	0.2	0.2	5	5	50	50	343	358	27.4	30.4	37.67	47	580	626
Jul 2006	BD	5	0.2	0.2	5	5	48	96	384.5	388	30.35	30.5	68.5	105	644	646
Aug 2006	BD	5	0.2	0.2	5	5	50	50	369.5	373	31.55	32.1	46	54	648.5	655
Sep 2006	BD	BD	BD	BD	5	5	78.67	161	362.67	420	33.13	35.5	113.67	245	627.33	701
Oct 2006	BD	BD	BD	BD	5	5	50	50	403	403	29.9	29.9	15	15	632	632
Nov 2006	BD	BD	BD	BD	5	5	50	50	385	385	7.21	7.21	18	18	667	667
Dec 2006	BD	BD	BD	BD	5	5	50	50	472	472	36.7	36.7	15	15	723	723
Jan 2007	BD	BD	BD	BD	5	5	58	58	442	442	35.3	35.3	58	58	745	745
Feb 2007	BD	BD	BD	BD	5	5	83	83	428	428	33.7	33.7	84	84	687	687
Mar 2007	BD	BD	0.2	0.2	5	5	81	81	254	254	31.9	31.9	151	151	454	454
Apr 2007	BD	BD	BD	BD	5	5	50	50	267.5	282	30.45	32.1	79	84	455	467
May 2007	BD	BD	BD	BD	5	5	50	50	247.33	274	24.03	26.3	60.67	76	423.67	446
Jun 2007	BD	5	0.2	0.2	11	33	8,489.33	25,200	263	290	20.93	28.2	6,440.33	18,700	590.67	954
Jul 2007	BD	BD	BD	BD	5	5	50	50	350	351	20.8	22.9	33.5	36	585.5	607
Aug 2007	BD	BD	BD	BD	5	5	50	50	337.33	351	23.7	27.2	15	28	592.67	618
Sep 2007	BD	BD	BD	BD	5	5	50	50	334.5	348	27.8	34.1	35	45	580	612
Oct 2007	BD	BD	BD	BD	5	5	50	50	351	351	20.5	20.5	12	12	550	550
Nov 2007	BD	BD	BD	BD	5	5	50	50	339	339	22.9	22.9	36	36	557	557
Dec 2007	BD	BD	BD	BD	5	5	50	50	345	345	22	22	19	19	542	542
Jan 2008	BD	BD	0.2	0.2	5	5	50	50	320	320	20	20	25	25	566	566
Feb 2008	BD	BD	BD	BD	5	5	50	50	363	363	21.4	21.4	27	27	595	595

Compliance Point 001 - A

DMR	Total Recoverable Selenium		Total Recoverable Mercury		Total Recoverable Arsenic		Total Recoverable Iron		Total Sulfate		Total Sodium		Total Recoverable Aluminum		TDS	
	30-Day Avg	Daily Max	30-Day Avg	Daily Max	30-Day Avg	Daily Max	30-Day Avg	Daily Max	30-Day Avg	Daily Max	30-Day Avg	Daily Max	30-Day Avg	Daily Max	30-Day Avg	Daily Max
	4.6 ug/L	ug/L	1 ug/L	2 ug/L	ug/L	ug/L	ug/L	ug/L	mg/L	mg/L	mg/L	mg/L	ug/L	ug/L	mg/L	mg/L
Mar 2008	BD	BD	BD	BD	5	5	50	50	339	339	25.6	25.6	18	18	580	580
Apr 2008	BD	BD	BD	BD	5	5	79	158	351	385	33.95	34	181.5	322	524	576
May 2008	BD	BD	BD	BD	5	5	511.5	875	204	204	15.8	16.9	1,017	1,710	342	355
Jun 2008	BD	BD	0.2	0.2	5	5	81	243	222.33	257	14.57	16.1	197.4	451	389.33	429
Jul 2008	BD	BD	BD	BD	5	5	50	50	295	297	17.4	17.5	32	36	497.5	519
Aug 2008	BD	BD	BD	BD	5	5	50	50	293.5	332	19.3	19.4	25.5	27	507.5	515
Sep 2008	BD	BD	BD	BD	5	5	50	50	275.5	296	20.6	21.4	27	33	507.5	517
Oct 2008	BD	BD	BD	BD	5	5	50	50	255	255	18.3	18.3	16	16	492	492
Nov 2008	BD	BD	BD	BD	5	5	50	50	194	194	17.5	17.5	34	34	394	394
Dec 2008	BD	BD	BD	BD	5	5	50	50	286	286	14.6	14.6	40	40	490	490
Jan 2009	0	BD	BD	BD	5	5	50	50	277	277	15.9	15.9	27	27	520	520
Feb 2009	0	BD	BD	BD	BD	BD	BD	BD	289	289	16.8	16.8	35	35	472	472
Mar 2009	0	BD	BD	BD	BD	BD	BD	BD	236	236	15.3	15.3	55	55	406	406
Apr 2009	0	BD	BD	BD	BD	BD	113.5	227	172.4	248	12	13.9	241.5	403	385	429
May 2009	0	BD	BD	BD	BD	BD	43.33	70	181	190	15.47	21.7	121.33	149	320	331
Jun 2009	0	BD	BD	BD	BD	BD	BD	BD	202.67	228	10.07	10.6	68.33	90	377	417
Jul 2009	0	BD	BD	BD	BD	BD	BD	BD	171	231	10.4	10.4	24	28	453	454
Aug 2009	0	BD	BD	BD	BD	BD	BD	BD	223	233	13.55	14.9	41	45	463.5	472
Sep 2009	0	BD	BD	BD	BD	BD	BD	BD	263.85	268	14.6	16.4	31	31	489	496
Oct 2009	0	BD	BD	BD	BD	BD	BD	BD	268	268	14.3	14.3	23	23	459	459
Nov 2009	0	BD	BD	BD	BD	BD	BD	BD	269	269	15.9	15.9	58	58	459	459
Dec 2009	0	BD	BD	BD	BD	BD	BD	BD	317	317	14.5	14.5	29	29	482	482
Jan 2010	0	BD	BD	BD	BD	BD	BD	BD	303	303	13.9	13.9	27	27	534	534

Compliance Point 001 - A

DMR	Total Recoverable Selenium		Total Recoverable Mercury		Total Recoverable Arsenic		Total Recoverable Iron		Total Sulfate		Total Sodium		Total Recoverable Aluminum		TDS	
	30-Day Avg	Daily Max	30-Day Avg	Daily Max	30-Day Avg	Daily Max	30-Day Avg	Daily Max	30-Day Avg	Daily Max	30-Day Avg	Daily Max	30-Day Avg	Daily Max	30-Day Avg	Daily Max
	4.6 ug/L	ug/L	1 ug/L	2 ug/L	ug/L	ug/L	ug/L	ug/L	mg/L	mg/L	mg/L	mg/L	ug/L	ug/L	mg/L	mg/L
Feb 2010	0	BD	BD	BD	BD	BD	BD	BD	315	315	15.2	15.2	17	17	571	571
Mar 2010	0	BD	BD	BD	BD	BD	BD	BD	270	270	21.9	21.9	38	38	434	434
Apr 2010	0	BD	BD	BD	BD	BD	129	201	205	233	19.4	21.9	231.5	301	354	375
May 2010	0	BD	BD	BD	BD	BD	168.5	233	194	198	15.8	16.1	342	480	327.5	335
Jun 2010	0	BD	BD	BD	BD	BD	51	153	189.33	223	15.23	16.7	102.33	198	327.67	380
Jul 2010	0	BD	BD	BD	BD	BD	BD	BD	244	248	12.9	13.2	30	35	413	416
Aug 2010	0	BD	BD	BD	BD	BD	BD	BD	234	236	12.95	13.1	35.5	37	437.5	444
Sep 2010	ND	ND	ND	ND	ND	ND	ND	ND	ND	ND	ND	ND	ND	ND	ND	ND
Oct 2010	0	5	0.2	0.2	5	5	50	50	242	242	14.2	14.2	27	27	413	413
Nov 2010	0	BD	BD	BD	BD	BD	BD	BD	262	262	14	14	25	25	414	414
Dec 2010	0	BD	BD	BD	BD	BD	BD	BD	267	267	13.1	13.1	33	33	411	411
Jan 2011	0	BD	BD	BD	BD	BD	BD	BD	284	284	13.1	13.1	33	33	477	477
Feb 2011	0	BD	BD	BD	BD	BD	BD	BD	300	300	13.4	13.4	26	26	484	484
Mar 2011	0	BD	BD	BD	BD	BD	BD	BD	230	230	14.4	14.4	41	41	371	371
Apr 2011	0	BD	BD	BD	BD	BD	BD	BD	222.5	227	15.7	18.8	68	82	359	362
May 2011	0	BD	BD	BD	BD	BD	131.67	232	196	208	12.7	12.4	262.33	462	327.67	341
Jun 2011	0	BD	BD	BD	BD	BD	BD	BD	212.5	215	16.2	17.7	59.5	73	345	351
Jul 2011	0	BD	BD	BD	BD	BD	BD	BD	228.5	229	15	15.4	39.5	40	393	396
Aug 2011	0	BD	BD	BD	BD	BD	BD	BD	244.33	250	14.5	14.7	29.67	34	405.33	441
Sep 2011	0	BD	BD	BD	BD	BD	49	98	252.5	255	14.95	15.7	34	38	454	454
Oct 2011	0	BD	BD	BD	BD	BD	BD	BD	258	258	14.5	14.5	26	26	463	463
Nov 2011	0	BD	BD	BD	BD	BD	BD	BD	258	258	16.2	16.2	28	28	452	452
Dec 2011	0	BD	BD	BD	BD	BD	BD	BD	269	269	14.4	14.4	30	30	467	467

Compliance Point 001 - A

DMR	Total Recoverable Selenium		Total Recoverable Mercury		Total Recoverable Arsenic		Total Recoverable Iron		Total Sulfate		Total Sodium		Total Recoverable Aluminum		TDS	
	30-Day Avg	Daily Max	30-Day Avg	Daily Max	30-Day Avg	Daily Max	30-Day Avg	Daily Max	30-Day Avg	Daily Max	30-Day Avg	Daily Max	30-Day Avg	Daily Max	30-Day Avg	Daily Max
	4.6 ug/L	ug/L	1 ug/L	2 ug/L	ug/L	ug/L	ug/L	ug/L	mg/L	mg/L	mg/L	mg/L	ug/L	ug/L	mg/L	mg/L
Jan 2012	0	BD	BD	BD	BD	BD	BD	BD	288	288	15.7	15.7	16	16	483	483
Feb 2012	0	BD	BD	BD	BD	BD	BD	BD	311	311	16.6	16.6	45	45	519	519
Mar 2012	0	BD	BD	BD	BD	BD	BD	BD	225	225	14.8	14.8	BD	BD	392	392
Apr 2012	0	BD	BD	BD	BD	BD	BD	BD	228	243	16.6	16.7	20	21	395.5	404
May 2012	0	BD	BD	BD	BD	BD	BD	BD	240	246	17.65	18.1	17	24	398.5	415
Jun 2012	0	BD	BD	BD	BD	BD	BD	BD	261	270	17.75	18	17	18	450	466
Jul 2012	0	BD	BD	BD	BD	BD	BD	BD	272.5	278	18.05	18.3	23.5	29	475.5	489
Aug 2012	0	BD	BD	BD	285.33	291	BD	BD	18.93	19.1	18.93	19.1	158.67	17	506.67	514
Sep 2012	0	BD	BD	BD	BD	BD	BD	BD	311	311	18.9	19.3	15	15	510.5	527
Oct 2012	0	BD	BD	BD	BD	BD	BD	BD	313	313	18.8	18	10	10	541	541
Nov 2012	0	BD	BD	BD	BD	BD	BD	BD	159	159	17	17	19	19	523	523
Dec 2012	BD	BD	BD	BD	BD	BD	BD	BD	340	340	16.9	16.9	BD	BD	524	524
Jan 2013	0	BD	BD	BD	BD	BD	BD	BD	309	309	17.4	17.4	BD	BD	522	522
Feb 2013	0	BD	BD	BD	BD	BD	BD	BD	331	331	18	18	BD	BD	558	558
Mar 2013	0	BD	BD	BD	BD	BD	BD	BD	363	363	19.5	19.5	BD	BD	590	590
Apr 2013	0	BD	BD	BD	BD	BD	BD	BD	227.5	242	15.8	16.1	13.5	15	399.5	405
May 2013	0	BD	BD	BD	BD	BD	199	398	220.5	226	12.85	15.2	323.5	625	334	349
Jun 2013	0	BD	BD	BD	BD	BD	43.67	131	223	250	16.73	18.7	146.67	339	369.67	420
Jul 2013	0	BD	BD	BD	BD	BD	BD	BD	268.5	278	16.1	16.3	27	28	444.5	448
Aug 2013	0	5	BD	0.2	BD	5	BD	50	276	279	17.15	17.6	49	64	484	493
Sep 2013	0	5	BD	0.2	BD	5	BD	50	282	287	17.5	18.4	14.5	16	495.5	499
Oct 2013	0	5	BD	0.2	BD	5	198	198	194	194	15.2	15.2	483	483	316	316

Compliance Point 001 - A

DMR	Total Recoverable Selenium		Total Recoverable Mercury		Total Recoverable Arsenic		Total Recoverable Iron		Total Sulfate		Total Sodium		Total Recoverable Aluminum		TDS	
	30-Day Avg	Daily Max	30-Day Avg	Daily Max	30-Day Avg	Daily Max	30-Day Avg	Daily Max	30-Day Avg	Daily Max	30-Day Avg	Daily Max	30-Day Avg	Daily Max	30-Day Avg	Daily Max
	4.6 ug/L	ug/L	1 ug/L	2 ug/L	ug/L	ug/L	ug/L	ug/L	mg/L	mg/L	mg/L	mg/L	ug/L	ug/L	mg/L	mg/L
Nov 2013	0	5	BD	0.2	BD	5	BD	50	192	192	10.8	10.8	64	64	299	299
Dec 2013	0	5	BD	0.2	BD	5	BD	50	253	253	11.2	11.2	19	19	382	382
Jan 2014	0	5	BD	0.2	BD	5	BD	50	236	236	11.2	11.2	16	16	380	380
Feb 2014	0	5	BD	0.2	BD	5	56	56	223	223	11.7	11.7	39	39	397	397
Mar 2014	0	5	BD	0.2	BD	5	BD	50	176	176	12.8	12.8	40	40	276	276
Apr 2014	0	5	BD	0.2	BD	5	112	224	137.5	164	13.75	15.9	223.5	309	235.5	280
May 2014	0	5	BD	0.2	BD	5	198	326	114	119	9.08	9.66	326	539	235.5	248
Jun 2014	0	5	BD	0.2	BD	5	BD	50	163.5	172	12.9	13	28	29	287	294
Jul 2014	0	5	BD	0.2	BD	5	BD	50	194.7	207	12.83	13.5	17	21	364	376
Aug 2014	0	5	BD	0.2	BD	5	BD	50	209	211	13.65	14	22	24	379.5	382
Sep 2014	0	5	BD	0.2	BD	5	BD	50	222.5	223	13.9	13.9	11.5	13	401	404
Oct 2014	0	5	BD	0.2	BD	5	BD	50	216	216	14	14	BD	10	366	366
Nov 2014	0	5	BD	0.2	BD	5	BD	50	NR	NR	NR	NR	BD	10	342	342
Dec 2014	0	5	BD	0.2	BD	5	BD	50	NR	NR	NR	NR	14	14	407	407
Jan 2015	0	5	BD	0.2	BD	5	BD	50	247	247	19.4	19.4	BD	10	424	424
Feb 2015	0	5	BD	0.2	BD	5	52	52	160	160	NR	NR	63	63	309	309
Mar 2015	0	5	BD	0.2	BD	5	BD	50	173	173	NR	NR	41	41	291	291
Apr 2015	0	5	BD	0.2	BD	5	BD	50	179	179	15	15	26	26	323	323
May 2015	0	5	BD	0.2	BD	5	354	354	105	105	NR	NR	460	460	231	231
Jun 2015	0	5	BD	0.2	BD	5	259	259	156	156	NR	NR	378	378	268	268
Jul 2015	0	5	BD	0.2	BD	5	BD	50	170	170	12.7	12.7	46	46	325	325
Aug 2015	0	5	BD	0.2	BD	5	BD	50	188	188	NR	NR	35	35	335	335
Sep 2015	0	5	BD	0.2	BD	5	BD	50	195	195	NR	NR	27	27	357	357

Compliance Point 001 - A

DMR	Total Recoverable Selenium		Total Recoverable Mercury		Total Recoverable Arsenic		Total Recoverable Iron		Total Sulfate		Total Sodium		Total Recoverable Aluminum		TDS	
	30-Day Avg	Daily Max	30-Day Avg	Daily Max	30-Day Avg	Daily Max	30-Day Avg	Daily Max	30-Day Avg	Daily Max	30-Day Avg	Daily Max	30-Day Avg	Daily Max	30-Day Avg	Daily Max
	4.6 ug/L	ug/L	1 ug/L	2 ug/L	ug/L	ug/L	ug/L	ug/L	mg/L	mg/L	mg/L	mg/L	ug/L	ug/L	mg/L	mg/L
Oct 2015	0	5	BD	0.2	BD	5	BD	50	200	200	14.7	14.7	11	11	362	362
Nov 2015	0	5	BD	0.2	BD	5	BD	50	214	214	NR	NR	13	13	354	354
Dec 2015	0	5	BD	0.2	BD	5	BD	50	216	216	NR	NR	11	11	370	370
Jan 2016	0	5	BD	0.2	BD	5	BD	50	233	233	13.4	13.4	13	13	391	391
Feb 2016	0	5	BD	0.2	BD	5	BD	50	184	184	NR	NR	23	23	353	353
Mar 2016	0	5	BD	0.2	BD	5	BD	50	199	199	NR	NR	27	27	341	341
Apr 2016	0	5	BD	0.2	BD	5	BD	50	164	164	11.4	11.4	72	72	288	288
May 2016	0	5	BD	0.2	BD	5	80	80	150	150	NR	NR	137	137	277	277
Jun 2016	0	5	BD	0.2	BD	5	BD	50	188	188	NR	NR	27	27	339	339
Jul 2016	0	5	BD	0.2	BD	5	BD	50	198	198	12.5	12.5	13	13	365	365
Aug 2016	0	5	BD	0.2	BD	5	BD	50	201	201	NR	NR	16	16	373	373
Sep 2016	0	5	BD	0.2	BD	5	BD	50	207	207	NR	NR	13	13	385	385
Oct 2016	0	5	BD	0.2	BD	5	BD	50	237	237	15	15	16	16	432	432
Nov 2016	0	5	BD	0.2	BD	5	BD	50	241	241	NR	NR	BD	10	406	406
Dec 2016	0	5	BD	0.2	BD	5	BD	50	242	242	NR	NR	38	38	415	415
Jan 2017	0	5	BD	0.2	BD	5	BD	50	254	254	13.7	13.7	BD	10	429	429
Feb 2017	0	5	BD	0.2	BD	5	BD	50	259	259	NR	NR	11	11	427	427
Mar 2017	0	5	BD	0.2	BD	5	BD	50	252	252	NR	NR	11	11	408	408
Apr 2017	0	5	BD	0.2	BD	5	BD	50	231	231	11.2	11.2	BD	10	394	394
May 2017	0	5	BD	0.2	BD	5	BD	50	197	197	NR	NR	12	12	374	374
Jun 2017	0	5	BD	0.2	BD	5	BD	50	198	198	NR	NR	14	14	364	364
Jul 2017	0	5	BD	0.2	BD	5	BD	50	206	206	14.1	14.1	18	18	359	359
Aug 2017	0	5	BD	0.2	BD	5	BD	50	239	239	NR	NR	19	19	456	456

Compliance Point 001 - A

DMR	Total Recoverable Selenium		Total Recoverable Mercury		Total Recoverable Arsenic		Total Recoverable Iron		Total Sulfate		Total Sodium		Total Recoverable Aluminum		TDS	
	30-Day Avg	Daily Max	30-Day Avg	Daily Max	30-Day Avg	Daily Max	30-Day Avg	Daily Max	30-Day Avg	Daily Max	30-Day Avg	Daily Max	30-Day Avg	Daily Max	30-Day Avg	Daily Max
	4.6 ug/L	ug/L	1 ug/L	2 ug/L	ug/L	ug/L	ug/L	ug/L	mg/L	mg/L	mg/L	mg/L	ug/L	ug/L	mg/L	mg/L
Sep 2017	0	5	BD	0.2	BD	5	BD	50	254	254	NR	NR	BD	10	457	457
Oct 2017	0	5	BD	0.2	BD	5	BD	50	259	259	11.7	11.7	27	27	466	466
Nov 2017	0	5	BD	0.2	BD	5	BD	50	256	256	NR	NR	29	29	443	443
Dec 2017	0	5	BD	0.2	BD	5	BD	50	261	261	NR	NR	13	13	447	447
Jan 2018	0	5	BD	0.2	BD	5	102	102	265	265	13.4	13.4	65	65	456	456
Feb 2018	0	5	BD	0.2	BD	5	BD	50	272	272	NR	NR	17	17	457	457
Mar 2018	0	5	BD	0.2	BD	5	BD	50	253	253	NR	NR	11	11	409	409
Apr 2018	0	5	BD	0.2	BD	5	BD	50	218	218	11.7	11.7	12	12	366	366
May 2018	0	5	BD	0.2	BD	5	BD	50	173	173	NR	NR	62	62	282	282
Jun 2018	0	5	BD	0.2	BD	5	BD	50	194	194	NR	NR	23	23	310	310
Jul 2018	0	5	BD	0.2	BD	5	BD	50	184	184	13.2	13.2	46	46	325	325
Aug 2018	0	5	BD	0.2	BD	5	BD	50	202	202	NR	NR	33	33	364	364
Sep 2018	0	5	BD	0.2	BD	5	BD	50	212	212	NR	NR	20	20	369	369
Oct 2018	0	5	BD	0.2	BD	5	BD	50	218	218	14.6	14.6	12	12	383	383
Nov 2018	0	5	BD	0.2	BD	5	BD	50	236	236	NR	NR	17	17	392	392
Dec 2018	0	5	BD	0.2	BD	5	BD	50	256	256	NR	NR	21	21	387	387
Jan 2019	0	5	BD	0.2	BD	5	BD	50	262	262	14.8	14.8	20	20	456	456
Feb 2019	0	5	BD	0.2	BD	5	BD	50	261	261	NR	NR	14	14	411	411
Mar 2019	0	5	BD	0.2	BD	5	BD	50	268	268	NR	NR	38	38	440	440
Apr 2019	0	5	BD	0.2	BD	5	BD	50	152	152	13	13	156	156	270	270
May 2019	0	5	BD	0.2	BD	5	81	81	157	157	NR	NR	166	166	294	294
Jun 2019	0	5	BD	0.2	BD	5	102.5	205	135	135	NR	NR	306	306	245	245
Jul 2019	0	5	BD	0.2	BD	5	BD	50	165	165	10.2	10.2	60	60	306	306

Compliance Point 001 - A

DMR	Total Recoverable Selenium		Total Recoverable Mercury		Total Recoverable Arsenic		Total Recoverable Iron		Total Sulfate		Total Sodium		Total Recoverable Aluminum		TDS	
	30-Day Avg	Daily Max	30-Day Avg	Daily Max	30-Day Avg	Daily Max	30-Day Avg	Daily Max	30-Day Avg	Daily Max	30-Day Avg	Daily Max	30-Day Avg	Daily Max	30-Day Avg	Daily Max
	4.6 ug/L	ug/L	1 ug/L	2 ug/L	ug/L	ug/L	ug/L	ug/L	mg/L	mg/L	mg/L	mg/L	ug/L	ug/L	mg/L	mg/L
Aug 2019	0	5	BD	0.2	BD	5	BD	50	201	201	NR	NR	31	31	391	391
Sep 2019	0	5	BD	0.2	BD	5	BD	50	189	189	NR	NR	25	27	378	378
Oct 2019	0	5	BD	0.2	BD	5	BD	50	192	192	10.6	10.6	15	15	345	345
Nov 2019	0	5	BD	0.2	BD	5	102	102	159	159	NR	NR	149	149	307	307
Dec 2019	0	5	BD	0.2	BD	5	BD	50	198	198	NR	NR	28	28	281	281
Jan 2020	0	5	BD	0.2	BD	5	52	52	218	218	7.99	7.99	50	50	357	357
Feb 2020	0	5	BD	0.2	BD	5	BD	50	210	210	NR	NR	16	16	356	356
Mar 2020	0	5	BD	0.2	BD	5	131	131	144	144	NR	NR	165	165	255	255
Apr 2020	0	5	BD	0.2	BD	5	311	311	122	122	7.03	7.03	431	431	180	180
May 2020	0	5	BD	0.2	BD	5	270	270	NR	NR	NR	NR	345	345	245	245
Jun 2020	0	5	BD	0.2	BD	5	BD	50	NR	NR	NR	NR	40	40	278	278
Jul 2020	0	5	BD	0.2	BD	5	BD	50	181	181	8.89	8.89	29	29	327	327
Aug 2020	0	5	BD	0.2	BD	5	76	76	NR	NR	NR	NR	74	74	347	347
Sep 2020	0	5	BD	0.2	BD	5	BD	50	NR	NR	NR	NR	18	18	332	332
Oct 2020	0	5	BD	0.2	BD	5	BD	50	198	198	9.64	9.64	60	60	363	363
Nov 2020	0	5	BD	0.2	BD	5	BD	50	NR	NR	NR	NR	BD	10	415	415
Dec 2020	0	5	BD	0.2	BD	5	BD	50	NR	NR	NR	NR	12	12	405	405
Jan 2021	0	5	BD	0.2	BD	5	BD	50	238	238	10.4	10.4	28	28	383	383
Feb 2021	0	5	BD	0.2	BD	5	BD	50	NR	NR	NR	NR	18	18	401	401
Mar 2021	0	5	BD	0.2	BD	5	BD	50	NR	NR	NR	NR	27	27	402	402
Apr 2021	0	5	BD	0.2	BD	5	BD	50	190	190	8.68	8.68	16	16	313	313
May 2021	0	5	BD	0.2	BD	5	BD	50	NR	NR	NR	NR	29	29	292	292
Jun 2021	0	5	BD	0.2	BD	5	BD	50	NR	NR	NR	NR	20	20	296	296

Compliance Point 001 - A

DMR	Total Recoverable Selenium		Total Recoverable Mercury		Total Recoverable Arsenic		Total Recoverable Iron		Total Sulfate		Total Sodium		Total Recoverable Aluminum		TDS	
	30-Day Avg	Daily Max	30-Day Avg	Daily Max	30-Day Avg	Daily Max	30-Day Avg	Daily Max	30-Day Avg	Daily Max	30-Day Avg	Daily Max	30-Day Avg	Daily Max	30-Day Avg	Daily Max
	4.6 ug/L	ug/L	1 ug/L	2 ug/L	ug/L	ug/L	ug/L	ug/L	mg/L	mg/L	mg/L	mg/L	ug/L	ug/L	mg/L	mg/L
Jul 2021	0	5	BD	0.2	BD	5	BD	50	201	201	15.3	15.3	19	19	369	369
Aug 2021	0	5	BD	0.2	BD	5	BD	50	NR	NR	NR	NR	16	16	381	381
Sep 2021	0	5	BD	0.2	BD	5	BD	50	NR	NR	NR	NR	20	20	407	407
Oct 2021	0	5	BD	0.2	BD	5	BD	50	230	230	14.2	14.2	20	20	418	418
Nov 2021	0	5	BD	0.2	BD	5	BD	50	NR	NR	NR	NR	10	10	406	406
Dec 2021	0	5	BD	0.2	BD	5	BD	50	NR	NR	NR	NR	BD	10	376	376
Jan 2022	0	5	BD	0.2	BD	5	BD	50	256	256	14.4	14.4	12	12	423	423
Feb 2022	0	5	BD	0.2	BD	5	BD	50	NR	NR	NR	NR	22	22	420	420
Mar 2022	0	5	BD	0.2	BD	5	BD	50	NR	NR	NR	NR	BD	10	330	330
Apr 2022	0	5	BD	0.2	BD	5	BD	50	180	180	10.2	10.2	11	11	307	307
May 2022	0	5	BD	0.2	BD	5	72.5	145	NR	NR	NR	NR	50	50	318	318
Jun 2022	0	5	BD	0.2	BD	5	BD	50	NR	NR	NR	NR	41	41	296	296
Jul 2022	0	5	BD	0.2	BD	5	BD	50	182	182	14.7	14.7	25	25	348	348
Aug 2022	0	5	BD	0.2	BD	5	BD	50	NR	NR	NR	NR	20	20	378	378
Sep 2022	BD	BD	BD	0.2	BD	5	BD	50	NR	NR	NR	NR	15	15	370	370
Oct 2022	BD	BD	BD	0.2	BD	5	BD	50	194	194	12.9	12.9	12	12	384	384
Nov 2022	BD	BD	BD	0.2	BD	5	BD	50	208	208	11.7	11.7	15	15	352	352
Dec 2022	BD	BD	BD	0.2	BD	5	BD	50	NR	NR	NR	NR	11	11	371	371

Compliance Point 001 - W

DMR	Acute Ceriodaphnia Daily Max pass=0;fail=1	Acute Pimephales Promelas Daily Max pass=0;fail=1
Sep 2005	0	NR
Dec 2005	NR	0
Mar 2006	0	NR
Jun 2006	NR	0
Sep 2006	0	0
Dec 2006	NR	0
Mar 2007	0	NR
Jun 2007	NR	0
Sep 2007	0	NR
Dec 2007	NR	0
Mar 2008	0	0
Jun 2008	NR	0
Sep 2008	0	NR
Dec 2008	NR	0
Mar 2009	0	NR
Jun 2009	NR	0
Sep 2009	0	NR
Dec 2009	NR	0
Mar 2010	0	NR
Jun 2010	NR	0
Sep 2010	ND	ND
Dec 2010	NR	0
Mar 2011	0	NR

DMR	Acute Ceriodaphnia Daily Max pass=0;fail=1	Acute Pimephales Promelas Daily Max pass=0;fail=1
Jun 2011	NR	0
Sep 2011	0	NR
Dec 2011	NR	0
Mar 2012	0	0
Jun 2012	NR	0
Sep 2012	0	NR
Dec 2012	NR	0
Mar 2013	0	NR
Jun 2013	NR	0
Sep 2013	0	NR
Dec 2013	NR	0
Mar 2014	0	NR
Jun 2014	NR	0
Sep 2014	0	NR
Dec 2014	NR	0
Mar 2015	0	NR
Jun 2015	NR	0
Sep 2015	0	NR
Dec 2015	NR	0
Mar 2016	0	NR
Jun 2016	NR	0
Sep 2016	0	NR
Dec 2016	NR	0

DMR	Acute Ceriodaphnia Daily Max pass=0;fail=1	Acute Pimephales Promelas Daily Max pass=0;fail=1
Mar 2017	0	NR
Jun 2017	NR	0
Sep 2017	0	NR
Dec 2017	NR	0
Mar 2018	0	NR
Jun 2018	NR	0
Sep 2018	0	NR
Dec 2018	NR	0
Mar 2019	0	NR
Jun 2019	NR	0
Sep 2019	0	NR
Dec 2019	NR	0
Mar 2020	0	NR
Jun 2020	NR	0
Sep 2020	0	NR
Dec 2020	NR	0
Mar 2021	0	NR
Jun 2021	NR	0
Sep 2021	0	NR
Dec 2021	NR	0
Mar 2022	0	NR
Jun 2022	NR	0
Sep 2022	0	NR
Dec 2022	NR	0

Compliance Point 002 - A

DMR	Flow rate		Water Temperature		pH		TSS		Ammonia-Nitrogen		Oil and grease visual	TPH	Total Recoverable Copper	
	Daily Min	Daily Max	30-Day Avg	Daily Max	Daily Min	Daily Max	30-Day Avg	Daily Max	30-Day Avg	Daily Max	Daily Max	Daily Max	30-Day Avg	Daily Max
	MGD	MGD	deg C	deg C	6 SU	9 SU	90 mg/L	158 mg/L	mg/L	mg/L	N=0;Y=1	10 mg/L	150 ug/L	300 ug/L
Jul 2005	0	0	10.9	10.9	7.02	7.02	10	10	0	0.05	0	NR	0	5
Aug 2005	0	0	12.6	12.6	7.42	7.42	10	10	0	0.05	0	NR	0	5
Sep 2005	0	0	10.3	10.3	7.03	7.03	38	38	0	0.05	0	NR	0	5
Oct 2005	0	0	7.3	7.3	7.04	7.04	10	10	BD	BD	0	NR	BD	BD
Nov 2005	0	0	3.9	3.9	6.92	6.92	10	10	0.05	0.05	0	NR	5	5
Dec 2005	0	0	0.9	0.9	6.97	6.97	10	10	0.05	0.05	0	NR	5	5
Jan 2006	0	0	1.7	1.7	6.89	6.89	10	10	0.05	0.05	0	NR	5	5
Feb 2006	0	0	1.1	1.1	6.74	6.74	10	10	0.05	0.05	0	NR	5	5
Mar 2006	0	0	1.9	1.9	6.83	6.83	10	10	0.05	0.05	0	NR	5	5
Apr 2006	0.12	0.12	3.6	3.6	7.01	7.01	10	10	0.05	0.05	0	NR	5	5
May 2006	0.04	0.04	6.3	6.3	6.97	6.97	10	10	0.05	0.05	0	NR	5	5
Jun 2006	0.02	0.02	7.2	7.2	6.77	6.77	10	10	0.05	0.05	0	NR	5	5
Jul 2006	0	0	11.2	11.2	7.1	7.1	10	10	0.05	0.05	0	NR	5	5
Aug 2006	0	0	13.2	13.2	7.29	7.29	10	10	0.05	0.05	0	NR	BD	BD
Sep 2006	0	0	5.9	5.9	7.08	7.08	10	10	0.05	0.05	0	NR	5	5
Oct 2006	0.01	0.01	5.6	5.6	6.81	6.81	10	10	0.05	0.05	0	NR	5	5
Nov 2006	0.01	0.01	4.6	4.6	6.86	6.86	10	10	0.05	0.05	0	NR	5	5
Dec 2006	0	0	2.2	2.2	6.95	6.95	10	10	0.05	0.05	0	NR	5	5
Jan 2007	0	0	0.2	0.2	6.82	6.82	10	10	0.05	0.05	0	NR	5	5
Feb 2007	0	0	1.5	1.5	6.78	6.78	10	10	0.05	0.05	0	9	5	5
Mar 2007	0.01	0.01	2.3	2.3	6.69	6.69	10	10	0.05	0.05	0	NR	5	5
Apr 2007	0.13	0.13	3.9	3.9	6.86	6.86	10	10	0.05	0.05	0	NR	5	5
May 2007	0.06	0.06	5.2	5.2	6.93	6.93	10	10	0.05	0.05	0	NR	5	5
Jun 2007	0.1	0.1	6.8	6.8	6.8	6.8	10	10	0.05	0.05	0	NR	5	5
Jul 2007	0	0	9.9	9.9	6.77	6.77	10	10	0.05	0.05	0	NR	5	5

Compliance Point 002 - A

DMR	Flow rate		Water Temperature		pH		TSS		Ammonia-Nitrogen		Oil and grease visual	TPH	Total Recoverable Copper	
	Daily Min	Daily Max	30-Day Avg	Daily Max	Daily Min	Daily Max	30-Day Avg	Daily Max	30-Day Avg	Daily Max	Daily Max	Daily Max	30-Day Avg	Daily Max
	MGD	MGD	deg C	deg C	6 SU	9 SU	90 mg/L	158 mg/L	mg/L	mg/L	N=0;Y=1	10 mg/L	150 ug/L	300 ug/L
Aug 2007	0	0	13.4	13.4	7.01	7.01	10	10	0.05	0.05	0	NR	5	5
Sep 2007	0	0	9.1	9.1	7.01	7.01	10	10	0.05	0.05	0	NR	5	5
Oct 2007	0	0	5.6	5.6	7.16	7.16	10	10	0.05	0.05	0	NR	6	6
Nov 2007	0	0	3.7	3.7	7.05	7.05	10	10	0.05	0.05	0	NR	5	5
Dec 2007	0	0	2.1	2.1	7.14	7.14	10	10	0.05	0.05	0	NR	5	5
Jan 2008	0	0	0.1	0.1	6.85	6.85	10	10	0.05	0.05	0	NR	5	5
Feb 2008	0	0	1.3	1.3	6.73	6.73	10	10	0.05	0.05	0	NR	5	5
Mar 2008	0	0	0.5	0.5	7.33	7.33	10	10	0.05	0.05	0	NR	5	5
Apr 2008	0.15	0.15	2.1	2.1	6.95	6.95	10	10	0.05	0.05	0	NR	5	5
May 2008	0.22	0.22	6	6	6.93	6.93	10	10	0.05	0.05	0	NR	5	5
Jun 2008	0.08	0.08	6.1	6.1	6.95	6.95	10	10	0.05	0.05	0	NR	5	5
Jul 2008	0.01	0.01	8.3	8.3	6.97	6.97	10	10	0.05	0.05	0	NR	5	5
Aug 2008	0.01	0.01	9.6	9.6	7.14	7.14	10	10	0.05	0.05	0	NR	5	5
Sep 2008	0.01	0.01	8.4	8.4	7.64	7.64	10	10	0.05	0.05	0	NR	5	5
Oct 2008	0	0	5.1	5.1	7.29	7.29	10	10	0.05	0.05	0	NR	5	5
Nov 2008	0.02	0.02	3.2	3.2	7.04	7.04	10	10	0.05	0.05	0	NR	5	5
Dec 2008	0.01	0.01	0.9	0.9	7.14	7.14	10	10	0.05	0.05	0	NR	5	5
Jan 2009	0	0	1.7	1.7	7.19	7.19	10	10	0.05	0.05	0	NR	5	5
Feb 2009	0.01	0.01	3.2	3.2	7.05	7.05	BD	BD	BD	BD	0	NR	BD	BD
Mar 2009	0.02	0.02	0.9	0.9	7.09	7.09	BD	BD	BD	BD	0	NR	BD	BD
Apr 2009	0.18	0.18	4.5	4.5	6.79	6.79	BD	BD	BD	BD	0	NR	BD	BD
May 2009	0.07	0.07	5.1	5.1	7.38	7.38	BD	BD	BD	BD	0	NR	BD	BD
Jun 2009	0.06	0.06	6	6	7.22	7.22	BD	BD	BD	BD	0	NR	BD	BD
Jul 2009	0.01	0.01	8.7	8.7	7.05	7.05	BD	BD	BD	BD	0	NR	BD	BD
Aug 2009	0.01	0.01	10.9	10.9	7.19	7.19	BD	BD	BD	BD	0	NR	BD	BD

Compliance Point 002 - A

DMR	Flow rate		Water Temperature		pH		TSS		Ammonia-Nitrogen		Oil and grease visual	TPH	Total Recoverable Copper	
	Daily Min	Daily Max	30-Day Avg	Daily Max	Daily Min	Daily Max	30-Day Avg	Daily Max	30-Day Avg	Daily Max	Daily Max	Daily Max	30-Day Avg	Daily Max
	MGD	MGD	deg C	deg C	6 SU	9 SU	90 mg/L	158 mg/L	mg/L	mg/L	N=0;Y=1	10 mg/L	150 ug/L	300 ug/L
Sep 2009	0	0	8.6	8.6	7.3	7.3	BD	BD	BD	BD	0	NR	BD	BD
Oct 2009	0	0	3.2	3.2	7.27	7.27	BD	BD	BD	BD	0	NR	BD	BD
Nov 2009	0.03	0.03	5.5	5.5	7.02	7.02	BD	BD	BD	BD	0	NR	BD	BD
Dec 2009	0	0	0.6	0.6	7.47	7.47	BD	BD	BD	BD	0	NR	BD	BD
Jan 2010	0	0	2.1	2.1	7.49	7.49	BD	BD	BD	BD	0	NR	BD	BD
Feb 2010	0	0	0.2	0.2	7.68	7.68	BD	BD	BD	BD	0	NR	BD	BD
Mar 2010	0.02	0.02	3	3	7.06	7.06	BD	BD	BD	BD	0	NR	BD	BD
Apr 2010	0.13	0.13	4	4	6.97	6.97	BD	BD	BD	BD	0	NR	BD	BD
May 2010	0.06	0.06	4.6	4.6	7.4	7.4	BD	BD	BD	BD	0	NR	BD	BD
Jun 2010	0.05	0.05	7.2	7.2	7.44	7.44	BD	BD	BD	BD	0	NR	BD	BD
Jul 2010	0.01	0.01	8.6	8.6	7.27	7.27	BD	BD	BD	BD	0	NR	BD	BD
Aug 2010	0.01	0.01	9.9	9.9	7.33	7.33	BD	BD	BD	BD	0	NR	BD	BD
Sep 2010	ND	ND	ND	ND	ND	ND	ND	ND	ND	ND	ND	ND	ND	ND
Oct 2010	0.02	0.02	7.1	7.1	7.02	7.02	10	10	0.05	0.05	0	NR	5	5
Nov 2010	0	0	1.2	1.2	6.83	6.83	BD	BD	BD	BD	0	NR	BD	BD
Dec 2010	0	0	2.6	2.6	6.95	6.95	BD	BD	BD	BD	0	NR	BD	BD
Jan 2011	0	0	1.6	1.6	6.86	6.86	BD	BD	BD	BD	0	NR	BD	BD
Feb 2011	0	0	0.4	0.4	6.85	6.85	BD	BD	BD	BD	0	NR	BD	BD
Mar 2011	0.01	0.01	2.8	2.8	7.17	7.17	BD	BD	BD	BD	0	NR	BD	BD
Apr 2011	0.05	0.05	2.9	2.9	7.02	7.02	BD	BD	BD	BD	0	NR	BD	BD
May 2011	0.16	0.16	5.5	5.5	6.9	6.9	BD	BD	BD	BD	0	NR	BD	BD
Jun 2011	0.05	0.05	6.3	6.3	7.09	7.09	BD	BD	BD	BD	0	NR	BD	BD
Jul 2011	0.01	0.01	10.4	10.4	7.33	7.33	BD	BD	BD	BD	0	NR	BD	BD
Aug 2011	0	0	10.9	10.9	7.39	7.39	BD	BD	BD	BD	0	NR	BD	BD
Sep 2011	0	0	10.1	10.1	7.45	7.45	BD	BD	BD	BD	0	NR	BD	BD

Compliance Point 002 - A

DMR	Flow rate		Water Temperature		pH		TSS		Ammonia-Nitrogen		Oil and grease visual	TPH	Total Recoverable Copper	
	Daily Min	Daily Max	30-Day Avg	Daily Max	Daily Min	Daily Max	30-Day Avg	Daily Max	30-Day Avg	Daily Max	Daily Max	Daily Max	30-Day Avg	Daily Max
	MGD	MGD	deg C	deg C	6 SU	9 SU	90 mg/L	158 mg/L	mg/L	mg/L	N=0;Y=1	10 mg/L	150 ug/L	300 ug/L
Oct 2011	0	0	7.7	7.7	7.38	7.38	BD	BD	BD	BD	0	NR	BD	BD
Nov 2011	0	0	2.9	2.9	7.41	7.41	BD	BD	BD	BD	0	BD	BD	BD
Dec 2011	0	0	1.6	1.6	7.35	7.35	BD	BD	BD	BD	0	NR	BD	BD
Jan 2012	0	0	3.1	3.1	7.44	7.44	BD	BD	BD	BD	0	NR	BD	BD
Feb 2012	0	0	1.9	1.9	7.49	7.49	BD	BD	BD	BD	0	NR	BD	BD
Mar 2012	0.01	0.01	2.8	2.8	7.19	7.19	10	10	BD	BD	0	NR	BD	BD
Apr 2012	0.02	0.02	4.6	4.6	7.33	7.33	BD	BD	BD	BD	0	NR	BD	BD
May 2012	0.02	0.02	5.4	5.4	7.21	7.21	BD	BD	BD	BD	0	NR	BD	BD
Jun 2012	0.01	0.01	8.6	8.6	7.22	7.22	BD	BD	BD	BD	0	NR	BD	BD
Jul 2012	0	0	12.3	12.3	7.39	7.39	BD	BD	BD	BD	0	NR	BD	BD
Aug 2012	0	0	11.4	11.4	7.33	7.33	BD	BD	BD	BD	0	NR	BD	BD
Sep 2012	0	0	11.8	11.8	7.55	7.55	BD	BD	BD	BD	0	NR	BD	BD
Oct 2012	0	0	8.5	8.5	7.67	7.67	BD	BD	BD	BD	0	NR	BD	BD
Nov 2012	0	0	6.1	6.1	7.68	7.68	BD	BD	BD	BD	0	NR	BD	BD
Dec 2012	0	0	3.6	3.6	7.46	7.46	BD	BD	BD	BD	0	NR	BD	BD
Jan 2013	0	0	1.8	1.8	7.43	7.43	BD	BD	BD	BD	0	NR	BD	BD
Feb 2013	0	0	1.9	1.9	7.56	7.56	BD	BD	BD	BD	0	NR	BD	BD
Mar 2013	0	0	0.6	0.6	7.64	7.64	BD	BD	BD	BD	0	NR	BD	BD
Apr 2013	0.01	0.01	2.1	2.1	7.87	7.87	BD	BD	BD	BD	0	NR	BD	BD
May 2013	0.04	0.04	6.1	6.1	7.07	7.07	BD	BD	BD	BD	0	NR	BD	BD
Jun 2013	0.03	0.03	6.8	6.8	7.07	7.07	BD	BD	BD	BD	0	NR	BD	BD
Jul 2013	0.01	0.01	10.3	10.3	7.28	7.28	BD	BD	BD	BD	0	NR	BD	BD
Aug 2013	0.01	0.01	10.4	10.4	7.3	7.3	BD	10	BD	0.05	0	NR	BD	5
Sep 2013	0	0	10.3	10.3	7.45	7.45	BD	10	BD	0.05	0	NR	BD	5
Oct 2013	0.39	0.39	6.6	6.6	7.09	7.09	BD	10	BD	0.05	0	NR	BD	5

Compliance Point 002 - A

DMR	Flow rate		Water Temperature		pH		TSS		Ammonia-Nitrogen		Oil and grease visual	TPH	Total Recoverable Copper	
	Daily Min	Daily Max	30-Day Avg	Daily Max	Daily Min	Daily Max	30-Day Avg	Daily Max	30-Day Avg	Daily Max	Daily Max	Daily Max	30-Day Avg	Daily Max
	MGD	MGD	deg C	deg C	6 SU	9 SU	90 mg/L	158 mg/L	mg/L	mg/L	N=0;Y=1	10 mg/L	150 ug/L	300 ug/L
Nov 2013	0.04	0.04	5.9	5.9	7.3	7.3	BD	10	BD	0.05	0	NR	BD	5
Dec 2013	0.01	0.01	2.8	2.8	7.55	7.55	BD	10	BD	0.05	0	NR	BD	5
Jan 2014	0	0	0.8	0.8	7.58	7.58	BD	10	BD	0.05	0	NR	BD	5
Feb 2014	FR	FR	FR	FR	FR	FR	FR	FR	FR	FR	FR	FR	FR	FR
Mar 2014	0.01	0.01	1.8	1.8	7.44	7.44	BD	10	BD	0.05	0	NR	BD	5
Apr 2014	0.15	0.15	3.4	3.4	6.89	6.89	BD	10	BD	0.05	0	NR	BD	5
May 2014	0.11	0.11	5.2	5.2	6.98	6.98	BD	10	BD	0.05	0	NR	BD	5
Jun 2014	0.02	0.02	6.6	6.6	7.24	7.24	BD	10	BD	0.05	0	NR	BD	5
Jul 2014	0.01	0.01	8.5	8.5	7.33	7.33	BD	10	BD	0.05	0	NR	BD	5
Aug 2014	0	0	10.2	10.2	7.43	7.43	BD	10	BD	0.05	0	NR	BD	5
Sep 2014	0	0	8.2	8.2	7.62	7.62	BD	10	BD	0.05	0	NR	BD	5
Oct 2014	0.02	0.02	7.5	7.5	7.23	7.23	BD	10	BD	0.05	0	NR	BD	5
Nov 2014	0	0	2.7	2.7	7.52	7.52	BD	10	BD	0.05	0	NR	BD	5
Dec 2014	0	0	3.4	3.4	7.43	7.43	BD	10	BD	0.05	0	NR	BD	5
Jan 2015	0	0	1.1	1.1	7.64	7.64	BD	10	BD	0.05	0	NR	BD	5
Feb 2015	0.02	0.02	3.4	3.4	7.19	7.19	BD	10	BD	0.05	0	NR	BD	5
Mar 2015	0.01	0.01	2.9	2.9	7.2	7.2	BD	10	BD	0.05	0	NR	BD	5
Apr 2015	0.03	0.03	3.9	3.9	7.08	7.08	BD	10	BD	0.05	0	NR	BD	5
May 2015	0.26	0.26	5.1	5.1	6.83	6.83	BD	10	BD	0.05	0	NR	BD	5
Jun 2015	0.06	0.06	7.1	7.1	6.89	6.89	BD	10	BD	0.05	0	NR	BD	5
Jul 2015	0.04	0.04	8.4	8.4	6.82	6.82	BD	10	BD	0.05	0	NR	BD	5
Aug 2015	0.01	0.01	10.5	10.5	7.48	7.48	BD	10	BD	0.05	0	NR	BD	5
Sep 2015	0.01	0.01	9.6	9.6	7.26	7.26	BD	10	BD	0.05	0	NR	BD	5
Oct 2015	0	0	8	8	7.65	7.65	BD	10	BD	0.05	0	NR	BD	5
Nov 2015	0.01	0.01	4.6	4.6	7.61	7.61	BD	10	BD	0.05	0	NR	BD	5

Compliance Point 002 - A

DMR	Flow rate		Water Temperature		pH		TSS		Ammonia-Nitrogen		Oil and grease visual	TPH	Total Recoverable Copper	
	Daily Min	Daily Max	30-Day Avg	Daily Max	Daily Min	Daily Max	30-Day Avg	Daily Max	30-Day Avg	Daily Max	Daily Max	Daily Max	30-Day Avg	Daily Max
	MGD	MGD	deg C	deg C	6 SU	9 SU	90 mg/L	158 mg/L	mg/L	mg/L	N=0;Y=1	10 mg/L	150 ug/L	300 ug/L
Dec 2015	0	0	4.2	4.2	7.71	7.71	BD	10	BD	0.05	0	NR	BD	5
Jan 2016	0	0	1.9	1.9	7.66	7.66	BD	10	BD	0.05	0	NR	BD	5
Feb 2016	0	0	3.2	3.2	7.61	7.61	BD	10	BD	0.05	0	NR	BD	5
Mar 2016	0.02	0.02	3.6	3.6	7.27	7.27	BD	10	BD	0.05	0	NR	BD	5
Apr 2016	0.04	0.04	4.2	4.2	7.09	7.09	BD	10	BD	0.05	0	NR	BD	5
May 2016	0.01	0.01	5.4	5.4	7.18	7.18	BD	10	BD	0.05	0	NR	BD	5
Jun 2016	0	0	9.1	9.1	7.45	7.45	BD	10	BD	0.05	0	NR	BD	5
Jul 2016	0	0	9.9	9.9	7.72	7.72	BD	10	BD	0.05	0	NR	BD	5
Aug 2016	0	0	9.7	9.7	7.7	7.7	BD	10	BD	0.05	0	NR	BD	5
Sep 2016	0	0	9.6	9.6	7.34	7.34	BD	10	BD	0.05	0	NR	BD	5
Oct 2016	0	0	6.4	6.4	7.85	7.85	BD	10	BD	0.05	0	NR	BD	5
Nov 2016	0	0	6.3	6.3	7.88	7.88	BD	10	BD	0.05	0	NR	BD	5
Dec 2016	0	0	1.7	1.7	7.94	7.94	BD	10	BD	0.05	0	NR	BD	5
Jan 2017	0	0	0.1	0.1	7.86	7.86	BD	10	BD	0.05	0	NR	BD	5
Feb 2017	0	0	2	2	7.74	7.74	BD	10	BD	0.05	0	NR	BD	5
Mar 2017	0	0	1.9	1.9	7.77	7.77	BD	10	BD	0.05	0	NR	BD	5
Apr 2017	0.01	0.01	3.3	3.3	7.65	7.65	BD	10	BD	0.05	0	NR	BD	5
May 2017	0.02	0.02	7.2	7.2	7.28	7.28	BD	10	BD	0.05	0	NR	BD	5
Jun 2017	0.02	0.02	7.7	7.7	7.07	7.07	BD	10	BD	0.05	0	NR	BD	5
Jul 2017	0	0	11.6	11.6	7.21	7.21	BD	10	BD	0.05	0	NR	BD	5
Aug 2017	0	0	11.6	11.6	7.65	7.65	BD	10	BD	0.05	0	NR	BD	5
Sep 2017	0	0	9.9	9.9	7.69	7.69	BD	10	BD	0.05	0	NR	BD	5
Oct 2017	0	0	5.4	5.4	7.75	7.75	BD	10	BD	0.05	0	NR	BD	5
Nov 2017	0	0	2.8	2.8	7.84	7.84	BD	10	BD	0.05	0	NR	BD	5
Dec 2017	0	0	2.3	2.3	7.81	7.81	BD	10	BD	0.05	0	NR	BD	5

Compliance Point 002 - A

DMR	Flow rate		Water Temperature		pH		TSS		Ammonia-Nitrogen		Oil and grease visual	TPH	Total Recoverable Copper	
	Daily Min	Daily Max	30-Day Avg	Daily Max	Daily Min	Daily Max	30-Day Avg	Daily Max	30-Day Avg	Daily Max	Daily Max	Daily Max	30-Day Avg	Daily Max
	MGD	MGD	deg C	deg C	6 SU	9 SU	90 mg/L	158 mg/L	mg/L	mg/L	N=0;Y=1	10 mg/L	150 ug/L	300 ug/L
Jan 2018	FR	FR	FR	FR	FR	FR	FR	FR	FR	FR	FR	FR	FR	FR
Feb 2018	0	0	1.4	1.4	7.71	7.71	BD	10	BD	0.05	0	NR	BD	5
Mar 2018	0	0	1.6	1.6	7.66	7.66	BD	10	BD	0.05	0	NR	BD	5
Apr 2018	0.04	0.04	2.9	2.9	7.18	7.18	BD	10	BD	0.05	0	NR	BD	5
May 2018	0.03	0.03	6.3	6.3	7.28	7.28	BD	10	BD	0.05	0	NR	BD	5
Jun 2018	0.01	0.01	8.3	8.3	7.43	7.43	BD	10	BD	0.05	0	NR	BD	5
Jul 2018	0.02	0.02	9.2	9.2	7.12	7.12	BD	10	BD	0.05	0	NR	BD	5
Aug 2018	0	0	9.8	9.8	7.39	7.39	BD	10	BD	0.05	0	NR	BD	5
Sep 2018	0	0	11.1	11.1	7.68	7.68	BD	10	BD	0.05	0	NR	BD	5
Oct 2018	0	0	5.4	5.4	7.63	7.63	BD	10	BD	0.05	0	NR	BD	5
Nov 2018	0.01	0.01	5	5	7.47	7.47	BD	10	BD	0.05	0	NR	BD	5
Dec 2018	0	0	2.3	2.3	7.61	7.61	BD	10	BD	0.05	0	NR	BD	5
Jan 2019	0	0	2.1	2.1	7.6	7.6	BD	10	BD	0.05	0	NR	BD	5
Feb 2019	0	0	0.9	0.9	7.43	7.43	BD	10	BD	0.05	0	NR	BD	5
Mar 2019	FR	FR	FR	FR	FR	FR	FR	FR	FR	FR	FR	FR	FR	FR
Apr 2019	0.13	0.13	3.8	3.8	6.67	6.67	BD	10	BD	0.05	0	NR	BD	5
May 2019	0.05	0.05	4.5	4.5	6.77	6.77	BD	10	BD	0.05	0	NR	BD	5
Jun 2019	0.02	0.02	7.5	7.5	7.28	7.28	BD	10	BD	0.05	0	NR	BD	5
Jul 2019	0.02	0.02	8.9	8.9	7.05	7.05	BD	10	BD	0.05	0	NR	BD	5
Aug 2019	0.01	0.01	9.5	9.5	7.27	7.27	BD	10	BD	0.05	0	NR	BD	5
Sep 2019	0	0	10.5	10.5	7.38	7.38	BD	10	BD	0.05	0	NR	BD	5
Oct 2019	0.01	0.01	6.3	6.3	7.36	7.36	BD	10	BD	0.05	0	NR	BD	5
Nov 2019	0.05	0.05	4.8	4.8	6.8	6.8	BD	10	BD	0.05	0	NR	BD	5
Dec 2019	WR	WR	WR	WR	WR	WR	WR	WR	WR	WR	WR	WR	WR	WR
Jan 2020	WR	WR	WR	WR	WR	WR	WR	WR	WR	WR	WR	WR	WR	WR

Compliance Point 002 - A

DMR	Flow rate		Water Temperature		pH		TSS		Ammonia-Nitrogen		Oil and grease visual	TPH	Total Recoverable Copper	
	Daily Min	Daily Max	30-Day Avg	Daily Max	Daily Min	Daily Max	30-Day Avg	Daily Max	30-Day Avg	Daily Max	Daily Max	Daily Max	30-Day Avg	Daily Max
	MGD	MGD	deg C	deg C	6 SU	9 SU	90 mg/L	158 mg/L	mg/L	mg/L	N=0;Y=1	10 mg/L	150 ug/L	300 ug/L
Feb 2020	WR	WR	WR	WR	WR	WR	WR	WR	WR	WR	WR	WR	WR	WR
Mar 2020	WR	WR	WR	WR	WR	WR	WR	WR	WR	WR	WR	WR	WR	WR
Apr 2020	WR	WR	WR	WR	WR	WR	WR	WR	WR	WR	WR	WR	WR	WR
May 2020	0.08	0.08	5.5	5.5	6.88	6.88	BD	10	BD	0.05	0	NR	BD	5
Jun 2020	0	0	8.1	8.1	6.98	6.98	BD	10	BD	0.05	0	NR	BD	5
Jul 2020	0	0	10	10	7.03	7.03	BD	10	BD	0.05	0	NR	BD	5
Aug 2020	0	0	11.4	11.4	6.9	6.9	BD	10	BD	0.05	0	NR	BD	5
Sep 2020	0	0	10.7	10.7	7.31	7.31	BD	10	BD	0.05	0	NR	BD	5
Oct 2020	0	0	6.7	6.7	7.38	7.38	BD	10	BD	0.05	0	NR	BD	5
Nov 2020	0	0	2.2	2.2	7.49	7.49	BD	10	BD	0.05	0	NR	BD	5
Dec 2020	0	0	3.3	3.3	7.36	7.36	BD	10	BD	0.05	0	NR	BD	5
Jan 2021	0	0	1.4	1.4	7.36	7.36	BD	10	BD	0.05	0	NR	BD	5
Feb 2021	0	0	1.1	1.1	7.36	7.36	BD	10	BD	0.05	0	NR	BD	5
Mar 2021	FR	FR	FR	FR	FR	FR	FR	FR	FR	FR	FR	FR	FR	FR
Apr 2021	0.02	0.02	3.2	3.2	7.06	7.06	BD	10	BD	0.05	0	NR	BD	5
May 2021	0.01	0.01	4.4	4.4	7.17	7.17	BD	10	BD	0.05	0	NR	BD	5
Jun 2021	0	0	8.4	8.4	7.02	7.02	BD	10	BD	0.05	0	NR	BD	5
Jul 2021	0	0	11.7	11.7	7.37	7.37	BD	10	BD	0.05	0	NR	BD	5
Aug 2021	0	0	14.2	14.2	7.42	7.42	BD	10	BD	0.05	0	NR	BD	5
Sep 2021	0	0	10.2	10.2	7.31	7.31	17	17	BD	0.05	0	NR	BD	5
Oct 2021	0	0	7.6	7.6	7.26	7.26	BD	10	BD	0.05	0	NR	BD	5
Nov 2021	0	0	4.3	4.3	7.19	7.19	BD	10	BD	0.05	0	NR	21	21
Dec 2021	0	0	3.8	3.8	7.14	7.14	BD	10	BD	0.05	0	NR	BD	5
Jan 2022	EC	EC	EC	EC	EC	EC	EC	EC	EC	EC	EC	EC	EC	EC
Feb 2022	EC	EC	EC	EC	EC	EC	EC	EC	EC	EC	EC	EC	EC	EC

Compliance Point 002 - A

DMR	Flow rate		Water Temperature		pH		TSS		Ammonia-Nitrogen		Oil and grease visual	TPH	Total Recoverable Copper	
	Daily Min	Daily Max	30-Day Avg	Daily Max	Daily Min	Daily Max	30-Day Avg	Daily Max	30-Day Avg	Daily Max	Daily Max	Daily Max	30-Day Avg	Daily Max
	MGD	MGD	deg C	deg C	6 SU	9 SU	90 mg/L	158 mg/L	mg/L	mg/L	N=0;Y=1	10 mg/L	150 ug/L	300 ug/L
Mar 2022	0	0	2.3	2.3	7.03	7.03	BD	10	BD	0.05	0	NR	BD	5
Apr 2022	0.01	0.01	3.6	3.6	6.93	6.93	BD	10	BD	0.05	0	NR	BD	5
May 2022	0.05	0.05	6.3	6.3	6.93	6.93	BD	10	BD	0.05	0	NR	BD	5
Jun 2022	0.01	0.01	8.5	8.5	6.93	6.93	BD	10	BD	0.05	0	NR	BD	5
Jul 2022	0	0	13.2	13.2	7.02	7.02	BD	10	BD	0.05	0	NR	BD	5
Aug 2022	0	0	14.3	14.3	7.17	7.17	BD	10	BD	0.05	0	NR	BD	5
Sep 2022	0	0	10.4	10.4	7.12	7.12	BD	10	BD	BD	0	NR	BD	5
Oct 2022	0	0	10.8	10.8	7.12	7.12	BD	10	BD	BD	0	NR	BD	5
Nov 2022	EC	EC	EC	EC	EC	EC	EC	EC	EC	EC	EC	EC	EC	EC
Dec 2022	EC	EC	EC	EC	EC	EC	EC	EC	EC	EC	EC	EC	EC	EC

Compliance Point 002 - A

DMR	WAD Cyanide		Total Recoverable Chromium		Nitrate-Nitrogen		Total Recoverable Nickel		Total Hardness		Total Recoverable Lead		Total Recoverable Silver		Total Recoverable Zinc		Total Recoverable Cadmium	
	30-Day Avg	Daily Max	30-Day Avg	Daily Max	30-Day Avg	Daily Max	30-Day Avg	Daily Max	30-Day Avg	Daily Min	30-Day Avg	Daily Max	30-Day Avg	Daily Max	30-Day Avg	Daily Max	30-Day Avg	Daily Max
	ug/L	22 ug/L	ug/L	ug/L	mg/L	mg/L	ug/L	ug/L	mg/L	mg/L	300 ug/L	600 ug/L	ug/L	ug/L	750 ug/L	1500 ug/L	50 ug/L	100 ug/L
Jul 2005	0	10	0	1	0	0.05	0	5	138	AR	0	1	0	1	0	50	0	1
Aug 2005	0	10	0	1	0	0.05	0	5	144	AR	2	2	0	1	0	50	0	1
Sep 2005	0	10	0	1	0.06	0.06	0	5	146	AR	1	1	0	1	0	50	0	1
Oct 2005	BD	BD	BD	BD	BD	BD	BD	BD	149	AR	BD	BD	BD	BD	BD	BD	BD	BD
Nov 2005	10	10	1	1	0.05	0.05	5	5	128	128	1	1	1	1	50	50	1	1

Compliance Point 002 - A

DMR	WAD Cyanide		Total Recoverable Chromium		Nitrate-Nitrogen		Total Recoverable Nickel		Total Hardness		Total Recoverable Lead		Total Recoverable Silver		Total Recoverable Zinc		Total Recoverable Cadmium	
	30-Day Avg	Daily Max	30-Day Avg	Daily Max	30-Day Avg	Daily Max	30-Day Avg	Daily Max	30-Day Avg	Daily Min	30-Day Avg	Daily Max	30-Day Avg	Daily Max	30-Day Avg	Daily Max	30-Day Avg	Daily Max
	ug/L	22 ug/L	ug/L	ug/L	mg/L	mg/L	ug/L	ug/L	mg/L	mg/L	300 ug/L	600 ug/L	ug/L	ug/L	750 ug/L	1500 ug/L	50 ug/L	100 ug/L
Dec 2005	10	10	1	1	0.05	0.05	5	5	131	131	1	1	1	1	50	50	1	1
Jan 2006	10	10	1	1	0.05	0.05	5	5	124	124	1	1	1	1	50	50	1	1
Feb 2006	10	10	1	1	0.05	0.05	5	5	119	119	1	1	1	1	50	50	1	1
Mar 2006	10	10	1	1	0.05	0.05	5	5	119	119	1	1	1	1	50	50	1	1
Apr 2006	10	10	1	1	0.42	0.42	5	5	79.7	79.7	1	1	1	1	50	50	1	1
May 2006	10	10	1	1	0.25	0.25	5	5	74.8	74.8	1	1	1	1	50	50	1	1
Jun 2006	10	10	1	1	0.05	0.05	5	5	97.7	97.7	1	1	1	1	50	50	1	1
Jul 2006	10	10	1	1	0.05	0.05	5	5	113	113	1	1	1	1	50	50	1	1
Aug 2006	10	10	1	1	0.05	0.05	5	5	140	140	1	1	1	1	50	50	1	1
Sep 2006	10	10	1	1	0.05	0.05	5	5	143	143	1	1	1	1	50	50	1	1
Oct 2006	10	10	1	1	0.05	0.05	5	5	115	115	1	1	1	1	50	50	1	1
Nov 2006	10	10	1	1	0.05	0.05	5	5	147	147	1	1	1	1	50	50	1	1
Dec 2006	10	10	1	1	0.05	0.05	5	5	130	130	1	1	1	1	50	50	1	1
Jan 2007	10	10	1	1	0.05	0.05	5	5	140	140	1	1	1	1	50	50	1	1
Feb 2007	10	10	1	1	0.05	0.05	5	5	115	115	1	1	1	1	50	50	1	1
Mar 2007	10	10	1	1	0.05	0.05	5	5	110	110	1	1	1	1	50	50	1	1
Apr 2007	10	10	1	1	0.33	0.33	5	5	84.7	84.7	1	1	1	1	50	50	1	1
May 2007	10	10	1	1	0.24	0.24	5	5	71	71	1	1	1	1	50	50	1	1
Jun 2007	10	10	1	1	0.05	0.05	5	5	93	93	1	1	1	1	50	50	1	1
Jul 2007	10	10	1	1	0.05	0.05	5	5	109	109	1	1	1	1	50	50	1	1
Aug 2007	10	10	1	1	0.05	0.05	5	5	111	111	1	1	1	1	50	50	1	1
Sep 2007	10	10	1	1	0.05	0.05	5	5	131	131	1	1	1	1	50	50	1	1
Oct 2007	10	10	1	1	0.05	0.05	5	5	119	119	1	1	1	1	53	53	1	1
Nov 2007	10	10	1	1	0.05	0.05	5	5	111	111	1	1	1	1	50	50	1	1

Compliance Point 002 - A

DMR	WAD Cyanide		Total Recoverable Chromium		Nitrate-Nitrogen		Total Recoverable Nickel		Total Hardness		Total Recoverable Lead		Total Recoverable Silver		Total Recoverable Zinc		Total Recoverable Cadmium	
	30-Day Avg	Daily Max	30-Day Avg	Daily Max	30-Day Avg	Daily Max	30-Day Avg	Daily Max	30-Day Avg	Daily Min	30-Day Avg	Daily Max	30-Day Avg	Daily Max	30-Day Avg	Daily Max	30-Day Avg	Daily Max
	ug/L	22 ug/L	ug/L	ug/L	mg/L	mg/L	ug/L	ug/L	mg/L	mg/L	300 ug/L	600 ug/L	ug/L	ug/L	750 ug/L	1500 ug/L	50 ug/L	100 ug/L
Dec 2007	10	10	1	1	0.05	0.05	5	5	106	106	1	1	1	1	50	50	1	1
Jan 2008	10	10	1	1	0.05	0.05	5	5	98.4	98.4	1	1	1	1	50	50	1	1
Feb 2008	10	10	1	1	0.05	0.05	5	5	103	103	1	1	1	1	50	50	1	1
Mar 2008	10	10	1	1	0.05	0.05	5	5	99.4	99.4	1	1	1	1	50	50	1	1
Apr 2008	10	10	1	1	0.2	0.2	5	5	80.6	80.6	1	1	1	1	50	50	1	1
May 2008	10	10	1	1	0.34	0.34	5	5	56.6	56.6	1	1	1	1	50	50	1	1
Jun 2008	10	10	1	1	0.18	0.18	5	5	187	1,897	1	1	1	1	50	50	1	1
Jul 2008	10	10	1	1	0.05	0.05	5	5	82.4	82.4	1	1	1	1	50	50	1	1
Aug 2008	10	10	1	1	0.05	0.05	5	5	89.8	89.8	1	1	1	1	50	50	1	1
Sep 2008	BD	BD	1	1	0.05	0.05	5	5	89	89	1	1	1	1	50	50	1	1
Oct 2008	BD	BD	1	1	0.05	0.05	5	5	107	107	1	1	1	1	50	50	1	1
Nov 2008	10	10	1	1	0.05	0.05	5	5	69.7	69.7	1	1	1	1	50	50	1	1
Dec 2008	BD	BD	1	1	0.05	0.05	5	5	81.4	81.4	1	1	1	1	50	50	1	1
Jan 2009	BD	BD	1	1	0.05	0.05	5	5	91.7	91.7	1	1	1	1	50	50	1	1
Feb 2009	BD	BD	BD	BD	BD	BD	BD	BD	90	90	BD	BD	BD	BD	BD	BD	BD	BD
Mar 2009	BD	BD	BD	BD	0.11	0.11	BD	BD	87.6	87.6	BD	BD	BD	BD	BD	BD	BD	BD
Apr 2009	BD	BD	1	1	0.27	0.27	BD	BD	53	53	BD	BD	BD	BD	96	96	BD	BD
May 2009	BD	BD	BD	BD	0.28	0.28	BD	BD	58.9	58.9	BD	BD	BD	BD	BD	BD	BD	BD
Jun 2009	BD	BD	BD	BD	0.22	0.22	BD	BD	59.6	59.6	BD	BD	BD	BD	BD	BD	BD	BD
Jul 2009	BD	BD	BD	BD	BD	BD	BD	BD	79.9	79.9	BD	BD	BD	BD	BD	BD	BD	BD
Aug 2009	BD	BD	BD	BD	BD	BD	BD	BD	90.4	90.4	BD	BD	BD	BD	BD	BD	BD	BD
Sep 2009	BD	BD	BD	BD	BD	BD	BD	BD	98.9	98.9	BD	BD	BD	BD	BD	BD	BD	BD
Oct 2009	BD	BD	BD	BD	BD	BD	BD	BD	97.1	97.1	BD	BD	BD	BD	BD	BD	BD	BD
Nov 2009	BD	BD	BD	BD	0.07	0.07	BD	BD	89	89	BD	BD	BD	BD	BD	BD	BD	BD

Compliance Point 002 - A

DMR	WAD Cyanide		Total Recoverable Chromium		Nitrate-Nitrogen		Total Recoverable Nickel		Total Hardness		Total Recoverable Lead		Total Recoverable Silver		Total Recoverable Zinc		Total Recoverable Cadmium	
	30-Day Avg	Daily Max	30-Day Avg	Daily Max	30-Day Avg	Daily Max	30-Day Avg	Daily Max	30-Day Avg	Daily Min	30-Day Avg	Daily Max	30-Day Avg	Daily Max	30-Day Avg	Daily Max	30-Day Avg	Daily Max
	ug/L	22 ug/L	ug/L	ug/L	mg/L	mg/L	ug/L	ug/L	mg/L	mg/L	300 ug/L	600 ug/L	ug/L	ug/L	750 ug/L	1500 ug/L	50 ug/L	100 ug/L
Dec 2009	BD	BD	BD	BD	BD	BD	BD	BD	91.2	91.2	BD	BD	BD	BD	BD	BD	BD	BD
Jan 2010	BD	BD	BD	BD	BD	BD	BD	BD	94.5	94.5	BD	BD	BD	BD	BD	BD	BD	BD
Feb 2010	BD	BD	BD	BD	BD	BD	BD	BD	79.8	79.8	BD	BD	BD	BD	BD	BD	BD	BD
Mar 2010	BD	BD	BD	BD	0.11	0.11	BD	BD	72.9	72.9	BD	BD	BD	BD	BD	BD	BD	BD
Apr 2010	BD	BD	1	1	0.42	0.42	BD	BD	54.7	54.7	1	1	BD	BD	BD	BD	BD	BD
May 2010	BD	BD	BD	BD	0.33	0.33	BD	BD	53.9	53.9	BD	BD	BD	BD	BD	BD	BD	BD
Jun 2010	BD	BD	BD	BD	0.25	0.25	BD	BD	57.6	57.6	BD	BD	BD	BD	BD	BD	BD	BD
Jul 2010	BD	BD	BD	BD	BD	BD	BD	BD	71	71	BD	BD	BD	BD	BD	BD	BD	BD
Aug 2010	BD	BD	BD	BD	BD	BD	BD	BD	68.9	68.9	BD	BD	BD	BD	66	66	BD	BD
Sep 2010	ND	ND	ND	ND	ND	ND	ND	ND	ND	ND	ND	ND	ND	ND	ND	ND	ND	ND
Oct 2010	10	10	1	1	0.05	0.05	5	5	84.9	84.9	1	1	1	1	50	50	1	1
Nov 2010	BD	BD	BD	BD	BD	BD	BD	BD	92.2	92.2	BD	BD	BD	BD	BD	BD	BD	BD
Dec 2010	BD	BD	BD	BD	BD	BD	BD	BD	95.4	95.4	BD	BD	BD	BD	BD	BD	BD	BD
Jan 2011	BD	BD	BD	BD	BD	BD	BD	BD	95.5	95.5	BD	BD	BD	BD	BD	BD	BD	BD
Feb 2011	BD	BD	BD	BD	BD	BD	BD	BD	85.4	85.4	BD	BD	BD	BD	BD	BD	BD	BD
Mar 2011	BD	BD	BD	BD	0.1	0.1	BD	BD	71.5	71.5	BD	BD	BD	BD	BD	BD	BD	BD
Apr 2011	BD	BD	BD	BD	0.45	0.45	BD	BD	67.3	67.3	BD	BD	BD	BD	BD	BD	BD	BD
May 2011	BD	BD	2	2	0.43	0.43	BD	BD	44.2	44.2	BD	BD	BD	BD	BD	BD	BD	BD
Jun 2011	BD	BD	BD	BD	0.23	0.23	BD	BD	55.7	55.7	BD	BD	BD	BD	BD	BD	BD	BD
Jul 2011	BD	BD	BD	BD	BD	BD	BD	BD	79.3	79.3	BD	BD	BD	BD	BD	BD	BD	BD
Aug 2011	BD	BD	BD	BD	BD	BD	BD	BD	91.2	91.2	BD	BD	BD	BD	BD	BD	BD	BD
Sep 2011	BD	BD	BD	BD	BD	BD	BD	BD	106	106	BD	BD	BD	BD	BD	BD	BD	BD
Oct 2011	BD	BD	BD	BD	BD	BD	BD	BD	104	104	BD	BD	BD	BD	BD	BD	BD	BD
Nov 2011	BD	BD	BD	BD	BD	BD	BD	BD	105	105	BD	BD	BD	BD	BD	BD	BD	BD

Compliance Point 002 - A

DMR	WAD Cyanide		Total Recoverable Chromium		Nitrate-Nitrogen		Total Recoverable Nickel		Total Hardness		Total Recoverable Lead		Total Recoverable Silver		Total Recoverable Zinc		Total Recoverable Cadmium	
	30-Day Avg	Daily Max	30-Day Avg	Daily Max	30-Day Avg	Daily Max	30-Day Avg	Daily Max	30-Day Avg	Daily Min	30-Day Avg	Daily Max	30-Day Avg	Daily Max	30-Day Avg	Daily Max	30-Day Avg	Daily Max
	ug/L	22 ug/L	ug/L	ug/L	mg/L	mg/L	ug/L	ug/L	mg/L	mg/L	300 ug/L	600 ug/L	ug/L	ug/L	750 ug/L	1500 ug/L	50 ug/L	100 ug/L
Dec 2011	BD	BD	BD	BD	BD	BD	BD	BD	99.1	99.1	BD	BD	BD	BD	BD	BD	BD	BD
Jan 2012	BD	BD	BD	BD	BD	BD	BD	BD	104	104	BD	BD	BD	BD	BD	BD	BD	BD
Feb 2012	BD	BD	BD	BD	0.09	0.09	BD	BD	117	117	BD	BD	BD	BD	BD	BD	BD	BD
Mar 2012	BD	BD	BD	BD	BD	BD	BD	BD	116	116	BD	BD	BD	BD	51	51	BD	BD
Apr 2012	BD	BD	BD	BD	0.3	0.3	BD	BD	91.4	91.4	BD	BD	BD	BD	BD	BD	BD	BD
May 2012	BD	BD	BD	BD	0.26	0.26	BD	BD	79	79	BD	BD	BD	BD	BD	BD	BD	BD
Jun 2012	BD	BD	BD	BD	BD	BD	BD	BD	94.8	94.8	BD	BD	BD	BD	BD	BD	BD	BD
Jul 2012	BD	BD	BD	BD	BD	BD	BD	BD	118	118	BD	BD	BD	BD	BD	BD	BD	BD
Aug 2012	BD	BD	BD	BD	BD	BD	BD	BD	136	136	BD	BD	BD	BD	BD	BD	BD	BD
Sep 2012	BD	BD	BD	BD	BD	BD	BD	BD	147	147	BD	BD	BD	BD	BD	BD	BD	BD
Oct 2012	BD	BD	BD	BD	BD	BD	BD	BD	150	150	BD	BD	BD	BD	BD	BD	BD	BD
Nov 2012	BD	BD	BD	BD	BD	BD	BD	BD	134	134	BD	BD	BD	BD	BD	BD	BD	BD
Dec 2012	BD	BD	BD	BD	BD	BD	BD	BD	147	147	BD	BD	BD	BD	BD	BD	BD	BD
Jan 2013	BD	BD	BD	BD	BD	BD	BD	BD	128	128	BD	BD	BD	BD	BD	BD	BD	BD
Feb 2013	BD	BD	BD	BD	BD	BD	BD	BD	126	126	BD	BD	BD	BD	BD	BD	BD	BD
Mar 2013	BD	BD	BD	BD	BD	BD	BD	BD	124	124	BD	BD	BD	BD	BD	BD	BD	BD
Apr 2013	BD	BD	BD	BD	BD	BD	BD	BD	95.4	95.4	BD	BD	BD	BD	BD	BD	BD	BD
May 2013	BD	BD	BD	BD	0.22	0.22	BD	BD	72.9	72.9	BD	BD	BD	BD	BD	BD	BD	BD
Jun 2013	BD	BD	BD	BD	0.16	0.16	BD	BD	76.6	76.6	BD	BD	BD	BD	BD	BD	BD	BD
Jul 2013	BD	BD	BD	BD	BD	BD	BD	BD	89.6	89.6	BD	BD	BD	BD	BD	BD	BD	BD
Aug 2013	BD	10	BD	1	BD	0.05	BD	5	101	101	BD	1	BD	1	BD	50	BD	1
Sep 2013	BD	10	BD	1	BD	0.05	BD	5	123	123	BD	1	BD	1	BD	50	BD	1
Oct 2013	BD	10	BD	1	0.15	0.15	BD	5	49.9	49.9	BD	1	BD	1	BD	50	BD	1
Nov 2013	BD	10	BD	1	BD	0.05	BD	5	60.4	60.4	BD	1	BD	1	BD	50	BD	1

Compliance Point 002 - A

DMR	WAD Cyanide		Total Recoverable Chromium		Nitrate-Nitrogen		Total Recoverable Nickel		Total Hardness		Total Recoverable Lead		Total Recoverable Silver		Total Recoverable Zinc		Total Recoverable Cadmium	
	30-Day Avg	Daily Max	30-Day Avg	Daily Max	30-Day Avg	Daily Max	30-Day Avg	Daily Max	30-Day Avg	Daily Min	30-Day Avg	Daily Max	30-Day Avg	Daily Max	30-Day Avg	Daily Max	30-Day Avg	Daily Max
	ug/L	22 ug/L	ug/L	ug/L	mg/L	mg/L	ug/L	ug/L	mg/L	mg/L	300 ug/L	600 ug/L	ug/L	ug/L	750 ug/L	1500 ug/L	50 ug/L	100 ug/L
Dec 2013	BD	10	BD	1	BD	0.05	BD	5	81.2	81.2	BD	1	BD	1	BD	50	BD	1
Jan 2014	BD	10	BD	1	BD	0.05	BD	5	89.6	89.6	BD	1	BD	1	BD	50	BD	1
Feb 2014	FR	FR	FR	FR	FR	FR	FR	FR	FR	FR	FR	FR	FR	FR	FR	FR	FR	FR
Mar 2014	BD	10	BD	1	0.12	0.12	BD	5	75.5	75.5	BD	1	BD	1	BD	50	BD	1
Apr 2014	BD	10	2	2	0.27	0.27	BD	5	46.3	46.3	1	1	BD	1	BD	50	BD	1
May 2014	BD	10	BD	1	0.21	0.21	BD	5	47.4	47.4	BD	1	BD	1	BD	50	BD	1
Jun 2014	BD	10	BD	1	BD	0.05	BD	5	64	64	BD	1	BD	1	BD	50	BD	1
Jul 2014	BD	10	BD	1	BD	0.05	BD	5	77.4	77.4	BD	1	BD	1	BD	50	BD	1
Aug 2014	BD	10	BD	1	BD	0.05	BD	5	91.8	91.8	BD	1	BD	1	BD	50	BD	1
Sep 2014	BD	10	BD	1	BD	0.05	BD	5	105	105	BD	1	BD	1	BD	50	BD	1
Oct 2014	BD	10	BD	1	BD	0.05	BD	5	76.2	76.2	BD	1	BD	1	BD	50	BD	1
Nov 2014	BD	10	BD	1	BD	0.05	BD	5	85.3	85.3	BD	1	BD	1	BD	50	BD	1
Dec 2014	BD	10	BD	1	BD	0.05	BD	5	90.9	90.9	BD	1	BD	1	BD	50	BD	1
Jan 2015	BD	10	BD	1	0.13	0.13	BD	5	84.7	84.7	BD	1	BD	1	BD	50	BD	1
Feb 2015	BD	10	BD	1	0.22	0.22	BD	5	68.3	68.3	BD	1	BD	1	BD	50	BD	1
Mar 2015	BD	10	BD	1	0.2	0.2	BD	5	73.6	73.6	BD	1	BD	1	BD	50	BD	1
Apr 2015	BD	10	1	1	0.29	0.29	BD	5	65.3	65.3	BD	1	BD	1	BD	50	BD	1
May 2015	BD	10	4	4	0.31	0.31	BD	5	42.2	42.2	2	2	BD	1	BD	50	BD	1
Jun 2015	BD	10	1	1	0.22	0.22	BD	5	51.5	51.5	BD	1	BD	1	BD	50	BD	1
Jul 2015	BD	10	BD	1	0.11	0.11	BD	5	57.8	57.8	BD	1	BD	1	BD	50	BD	1
Aug 2015	BD	10	BD	1	BD	0.05	BD	5	79.3	79.3	BD	1	BD	1	BD	50	BD	1
Sep 2015	BD	10	BD	1	BD	0.05	BD	5	87.3	87.3	BD	1	BD	1	52	52	BD	1
Oct 2015	BD	10	BD	1	BD	0.05	BD	5	94.6	94.6	BD	1	BD	1	BD	50	BD	1
Nov 2015	BD	10	BD	1	BD	0.05	BD	5	92.6	92.6	BD	1	BD	1	BD	50	BD	1

Compliance Point 002 - A

DMR	WAD Cyanide		Total Recoverable Chromium		Nitrate-Nitrogen		Total Recoverable Nickel		Total Hardness		Total Recoverable Lead		Total Recoverable Silver		Total Recoverable Zinc		Total Recoverable Cadmium	
	30-Day Avg	Daily Max	30-Day Avg	Daily Max	30-Day Avg	Daily Max	30-Day Avg	Daily Max	30-Day Avg	Daily Min	30-Day Avg	Daily Max	30-Day Avg	Daily Max	30-Day Avg	Daily Max	30-Day Avg	Daily Max
	ug/L	22 ug/L	ug/L	ug/L	mg/L	mg/L	ug/L	ug/L	mg/L	mg/L	300 ug/L	600 ug/L	ug/L	ug/L	750 ug/L	1500 ug/L	50 ug/L	100 ug/L
Dec 2015	BD	10	BD	1	BD	0.05	BD	5	93.2	93.2	BD	1	BD	1	BD	50	BD	1
Jan 2016	BD	10	BD	1	BD	5	BD	5	99.7	99.7	BD	1	BD	1	BD	50	BD	1
Feb 2016	BD	10	BD	1	0.2	0.2	BD	5	83.6	83.6	BD	1	BD	1	BD	50	BD	1
Mar 2016	BD	10	BD	1	0.42	0.42	BD	5	78.5	78.5	BD	1	BD	1	BD	50	BD	1
Apr 2016	BD	10	BD	1	0.39	0.39	BD	5	60.8	60.8	BD	1	BD	1	84	84	BD	1
May 2016	BD	10	BD	1	0.24	0.24	BD	5	65.1	65.1	BD	1	BD	1	72	72	BD	1
Jun 2016	BD	10	BD	1	0.06	0.06	BD	5	83.4	83.4	BD	1	BD	1	BD	50	BD	1
Jul 2016	BD	10	BD	1	BD	0.05	BD	5	99.3	99.3	BD	1	BD	1	BD	50	BD	1
Aug 2016	BD	10	BD	1	BD	0.05	BD	5	123	123	BD	1	BD	1	BD	50	BD	1
Sep 2016	BD	10	BD	1	BD	0.05	BD	5	122	122	BD	1	BD	1	BD	50	BD	1
Oct 2016	BD	10	BD	1	BD	0.05	BD	5	114	114	BD	1	BD	1	BD	50	BD	1
Nov 2016	BD	10	BD	1	BD	0.05	BD	5	119	119	BD	1	BD	1	BD	50	BD	1
Dec 2016	BD	10	BD	1	BD	0.05	BD	5	115	115	BD	1	BD	1	BD	50	BD	1
Jan 2017	BD	10	BD	1	BD	0.05	BD	5	115	115	BD	1	BD	1	BD	50	BD	1
Feb 2017	BD	10	BD	1	0.11	0.11	BD	5	118	118	BD	1	BD	1	BD	50	BD	1
Mar 2017	BD	10	BD	1	0.06	0.06	BD	5	102	102	BD	1	BD	1	BD	50	BD	1
Apr 2017	BD	10	BD	1	0.29	0.29	BD	5	77.8	77.8	BD	1	BD	1	BD	50	BD	1
May 2017	BD	10	BD	1	0.26	0.26	BD	5	75.4	75.4	BD	1	BD	1	BD	50	BD	1
Jun 2017	BD	10	BD	1	0.15	0.15	BD	5	69.5	69.5	BD	1	BD	1	BD	50	BD	1
Jul 2017	BD	10	BD	1	BD	0.05	BD	5	95.7	95.7	BD	1	BD	1	BD	50	BD	1
Aug 2017	BD	10	BD	1	BD	0.05	BD	5	119	119	BD	1	BD	1	BD	50	BD	1
Sep 2017	BD	10	BD	1	BD	0.05	BD	5	128	128	BD	1	BD	1	BD	50	BD	1
Oct 2017	BD	10	BD	1	BD	0.05	BD	5	116	116	BD	1	BD	1	60	60	BD	1
Nov 2017	BD	10	BD	1	BD	0.05	BD	5	111	111	BD	1	BD	1	BD	50	BD	1

Compliance Point 002 - A

DMR	WAD Cyanide		Total Recoverable Chromium		Nitrate-Nitrogen		Total Recoverable Nickel		Total Hardness		Total Recoverable Lead		Total Recoverable Silver		Total Recoverable Zinc		Total Recoverable Cadmium	
	30-Day Avg	Daily Max	30-Day Avg	Daily Max	30-Day Avg	Daily Max	30-Day Avg	Daily Max	30-Day Avg	Daily Min	30-Day Avg	Daily Max	30-Day Avg	Daily Max	30-Day Avg	Daily Max	30-Day Avg	Daily Max
	ug/L	22 ug/L	ug/L	ug/L	mg/L	mg/L	ug/L	ug/L	mg/L	mg/L	300 ug/L	600 ug/L	ug/L	ug/L	750 ug/L	1500 ug/L	50 ug/L	100 ug/L
Dec 2017	BD	10	BD	1	BD	0.05	BD	5	111	111	BD	1	BD	1	BD	50	BD	1
Jan 2018	FR	FR	FR	FR	FR	FR	FR	FR	FR	FR	FR	FR	FR	FR	FR	FR	FR	FR
Feb 2018	BD	10	BD	1	BD	0.05	BD	5	112	112	BD	1	BD	1	BD	50	BD	1
Mar 2018	BD	10	BD	1	BD	0.05	BD	5	105	105	BD	1	BD	1	BD	50	BD	1
Apr 2018	BD	10	1	1	0.32	0.32	BD	5	61.5	61.5	BD	1	BD	1	BD	50	BD	1
May 2018	BD	10	1	1	0.29	0.29	BD	5	58.8	58.8	BD	1	BD	1	80	80	BD	1
Jun 2018	BD	10	BD	1	BD	0.05	BD	5	71.2	71.2	BD	1	BD	1	BD	50	BD	1
Jul 2018	BD	10	BD	1	BD	0.05	BD	5	62.7	62.7	BD	1	BD	1	BD	50	BD	1
Aug 2018	BD	10	BD	1	BD	0.05	BD	5	76.1	76.1	BD	1	BD	1	BD	50	BD	1
Sep 2018	BD	10	BD	1	BD	0.05	BD	5	95.4	95.4	BD	1	BD	1	BD	50	BD	1
Oct 2018	BD	10	BD	1	BD	0.05	BD	5	98.6	98.6	BD	1	BD	1	BD	50	BD	1
Nov 2018	BD	10	BD	1	BD	0.05	BD	5	83.9	83.9	BD	1	BD	1	BD	50	BD	1
Dec 2018	BD	10	BD	1	BD	0.05	BD	5	93.1	93.1	BD	1	BD	1	BD	50	BD	1
Jan 2019	BD	10	BD	1	BD	0.05	BD	5	91.5	91.5	BD	1	BD	1	BD	50	BD	1
Feb 2019	BD	10	BD	1	BD	0.05	BD	5	98.5	98.5	BD	1	BD	1	BD	50	BD	1
Mar 2019	FR	FR	FR	FR	FR	FR	FR	FR	FR	FR	FR	FR	FR	FR	FR	FR	FR	FR
Apr 2019	BD	10	2	2	0.23	0.23	BD	5	44.4	44.4	1	1	BD	1	BD	50	BD	1
May 2019	BD	10	BD	1	0.2	0.2	BD	5	47.4	47.4	BD	1	BD	1	BD	50	BD	1
Jun 2019	BD	10	BD	1	BD	0.05	BD	5	49	49	BD	1	BD	1	BD	50	BD	1
Jul 2019	BD	10	BD	1	BD	0.05	BD	5	65.2	65.2	BD	1	BD	1	BD	50	BD	1
Aug 2019	BD	10	BD	1	BD	0.05	BD	5	73.9	73.9	BD	1	BD	1	BD	50	BD	1
Sep 2019	BD	10	BD	1	BD	0.05	BD	5	89.6	89.6	BD	1	BD	1	BD	50	BD	1
Oct 2019	BD	10	BD	1	BD	0.05	BD	5	86.1	86.1	BD	1	BD	1	BD	50	BD	1
Nov 2019	BD	10	2	2	0.21	0.21	6	6	62.6	62.6	BD	1	BD	1	BD	50	BD	1

Compliance Point 002 - A

DMR	WAD Cyanide		Total Recoverable Chromium		Nitrate-Nitrogen		Total Recoverable Nickel		Total Hardness		Total Recoverable Lead		Total Recoverable Silver		Total Recoverable Zinc		Total Recoverable Cadmium	
	30-Day Avg	Daily Max	30-Day Avg	Daily Max	30-Day Avg	Daily Max	30-Day Avg	Daily Max	30-Day Avg	Daily Min	30-Day Avg	Daily Max	30-Day Avg	Daily Max	30-Day Avg	Daily Max	30-Day Avg	Daily Max
	ug/L	22 ug/L	ug/L	ug/L	mg/L	mg/L	ug/L	ug/L	mg/L	mg/L	300 ug/L	600 ug/L	ug/L	ug/L	750 ug/L	1500 ug/L	50 ug/L	100 ug/L
Dec 2019	WR	WR	WR	WR	WR	WR	WR	WR	WR	WR	WR	WR	WR	WR	WR	WR	WR	WR
Jan 2020	WR	WR	WR	WR	WR	WR	WR	WR	WR	WR	WR	WR	WR	WR	WR	WR	WR	WR
Feb 2020	WR	WR	WR	WR	WR	WR	WR	WR	WR	WR	WR	WR	WR	WR	WR	WR	WR	WR
Mar 2020	WR	WR	WR	WR	WR	WR	WR	WR	WR	WR	WR	WR	WR	WR	WR	WR	WR	WR
Apr 2020	WR	WR	WR	WR	WR	WR	WR	WR	WR	WR	WR	WR	WR	WR	WR	WR	WR	WR
May 2020	BD	10	2	2	0.26	0.26	BD	5	47.7	47.7	BD	1	BD	1	BD	50	BD	1
Jun 2020	BD	10	BD	1	0.06	0.06	BD	5	69.5	69.5	BD	1	BD	1	BD	50	BD	1
Jul 2020	BD	10	BD	1	BD	0.05	BD	5	82.3	82.3	BD	1	BD	1	BD	50	BD	1
Aug 2020	BD	10	BD	1	BD	0.05	BD	5	97.8	97.8	BD	1	BD	1	BD	50	BD	1
Sep 2020	BD	10	BD	1	BD	0.05	BD	5	118	118	BD	1	BD	1	BD	50	BD	1
Oct 2020	BD	10	BD	1	BD	0.05	BD	5	115	115	BD	1	BD	1	BD	50	BD	1
Nov 2020	BD	10	BD	1	BD	0.05	BD	5	108	108	BD	1	BD	1	BD	50	BD	1
Dec 2020	BD	10	BD	1	BD	0.05	BD	5	104	104	BD	1	BD	1	BD	50	BD	1
Jan 2021	BD	10	BD	1	BD	0.05	BD	5	109	109	BD	1	BD	1	BD	50	BD	1
Feb 2021	BD	10	BD	1	BD	0.05	BD	5	107	107	BD	1	BD	1	BD	50	BD	1
Mar 2021	FR	FR	FR	FR	FR	FR	FR	FR	FR	FR	FR	FR	FR	FR	FR	FR	FR	FR
Apr 2021	BD	10	BD	1	0.22	0.22	BD	5	62.5	62.5	BD	1	BD	1	BD	50	BD	1
May 2021	BD	10	BD	1	0.11	0.11	BD	5	60.5	60.5	BD	1	BD	1	BD	50	BD	1
Jun 2021	BD	10	BD	1	BD	0.05	BD	5	71.2	71.2	BD	1	BD	1	BD	50	BD	1
Jul 2021	BD	10	BD	1	BD	0.05	BD	5	99.3	99.3	BD	1	BD	1	BD	50	BD	1
Aug 2021	BD	10	BD	1	BD	0.05	BD	5	128	128	BD	1	BD	1	BD	50	BD	1
Sep 2021	BD	10	BD	1	BD	0.05	BD	5	130	130	BD	1	BD	1	BD	50	BD	1
Oct 2021	BD	10	BD	1	BD	0.05	BD	5	132	132	BD	1	BD	1	BD	50	BD	1
Nov 2021	BD	10	1	1	BD	0.05	BD	5	87.6	87.6	3	3	BD	1	120	120	BD	1

Compliance Point 002 - A

DMR	WAD Cyanide		Total Recoverable Chromium		Nitrate-Nitrogen		Total Recoverable Nickel		Total Hardness		Total Recoverable Lead		Total Recoverable Silver		Total Recoverable Zinc		Total Recoverable Cadmium	
	30-Day Avg	Daily Max	30-Day Avg	Daily Max	30-Day Avg	Daily Max	30-Day Avg	Daily Max	30-Day Avg	Daily Min	30-Day Avg	Daily Max	30-Day Avg	Daily Max	30-Day Avg	Daily Max	30-Day Avg	Daily Max
	ug/L	22 ug/L	ug/L	ug/L	mg/L	mg/L	ug/L	ug/L	mg/L	mg/L	300 ug/L	600 ug/L	ug/L	ug/L	750 ug/L	1500 ug/L	50 ug/L	100 ug/L
Dec 2021	BD	10	BD	1	BD	0.05	BD	5	98.9	98.9	BD	1	BD	1	BD	50	BD	1
Jan 2022	EC	EC	EC	EC	EC	EC	EC	EC	EC	EC	EC	EC	EC	EC	EC	EC	EC	EC
Feb 2022	EC	EC	EC	EC	EC	EC	EC	EC	EC	EC	EC	EC	EC	EC	EC	EC	EC	EC
Mar 2022	BD	10	BD	1	BD	0.05	BD	5	89.7	89.7	BD	1	BD	1	BD	50	BD	1
Apr 2022	BD	10	BD	1	BD	0.05	BD	5	76.2	76.2	BD	1	BD	1	BD	50	BD	1
May 2022	BD	10	BD	1	0.1	0.1	BD	5	50.6	50.6	BD	1	BD	1	BD	50	BD	1
Jun 2022	BD	10	BD	1	BD	0.05	BD	5	60	60	BD	1	BD	1	BD	50	BD	1
Jul 2022	BD	10	BD	1	BD	0.05	BD	5	292	292	BD	1	BD	1	BD	50	BD	1
Aug 2022	BD	10	BD	1	BD	0.05	BD	5	99.1	99.1	BD	1	BD	1	BD	50	BD	1
Sep 2022	BD	10	BD	1	BD	0.05	BD	5	120	120	BD	1	BD	1	BD	50	BD	1
Oct 2022	BD	10	BD	1	BD	0.05	BD	5	122	122	BD	1	BD	1	BD	50	BD	1
Nov 2022	EC	EC	EC	EC	EC	EC	EC	EC	EC	EC	EC	EC	EC	EC	EC	EC	EC	EC
Dec 2022	EC	EC	EC	EC	EC	EC	EC	EC	EC	EC	EC	EC	EC	EC	EC	EC	EC	EC

Compliance Point 002 - A

DMR	Total Recoverable Selenium		Total Recoverable Mercury		Total Recoverable Arsenic		Total Recoverable Iron		Total Sulfate		Total Sodium		Total Recoverable Aluminum		TDS	
	30-Day Avg	Daily Max	30-Day Avg	Daily Max	30-Day Avg	Daily Max	30-Day Avg	Daily Max	30-Day Avg	Daily Max	30-Day Avg	Daily Max	30-Day Avg	Daily Max	30-Day Avg	Daily Max
	4.6 ug/L	ug/L	1 ug/L	2 ug/L	ug/L	ug/L	ug/L	ug/L	mg/L	mg/L	mg/L	mg/L	ug/L	ug/L	mg/L	mg/L
Jul 2005	0	5	0	0.2	0	5	57	57	134	134	11.3	11.3	54	54	252	252
Aug 2005	0	5	0	0.2	0	5	0	50	125	125	9.71	9.71	410	410	248	248

Compliance Point 002 - A

DMR	Total Recoverable Selenium		Total Recoverable Mercury		Total Recoverable Arsenic		Total Recoverable Iron		Total Sulfate		Total Sodium		Total Recoverable Aluminum		TDS	
	30-Day Avg	Daily Max	30-Day Avg	Daily Max	30-Day Avg	Daily Max	30-Day Avg	Daily Max	30-Day Avg	Daily Max	30-Day Avg	Daily Max	30-Day Avg	Daily Max	30-Day Avg	Daily Max
	4.6 ug/L	ug/L	1 ug/L	2 ug/L	ug/L	ug/L	ug/L	ug/L	mg/L	mg/L	mg/L	mg/L	ug/L	ug/L	mg/L	mg/L
Sep 2005	0	5	0	0.2	0	5	471	471	117	117	7.56	7.56	435	435	231	231
Oct 2005	BD	BD	BD	BD	BD	BD	BD	BD	133	133	9.36	9.36	12	12	226	226
Nov 2005	BD	BD	0.2	0.2	5	5	50	50	112	112	8.58	8.58	14	14	202	202
Dec 2005	BD	BD	0.2	0.2	5	5	50	50	114	114	8.2	8.2	19	19	197	197
Jan 2006	BD	BD	0.2	0.2	5	5	50	50	109	109	7.49	7.49	44	44	188	188
Feb 2006	BD	BD	0.2	0.2	5	5	50	50	104	104	7.08	7.08	19	19	185	185
Mar 2006	BD	BD	0.2	0.2	5	5	50	50	105	105	7.68	7.68	47	47	195	195
Apr 2006	BD	BD	0.2	0.2	5	5	156	156	79.2	79.2	9.65	9.65	223	223	159	159
May 2006	BD	BD	0.2	0.2	5	5	73	73	74.3	74.3	9.45	9.45	153	153	161	161
Jun 2006	BD	5	0.2	0.2	5	5	50	50	96.4	96.4	10.1	10.1	28	28	185	185
Jul 2006	BD	5	0.2	0.2	5	5	50	50	100	100	9.61	9.61	32	32	185	185
Aug 2006	BD	5	BD	BD	5	5	50	50	116	116	7.88	7.88	109	109	239	239
Sep 2006	BD	BD	BD	BD	5	5	50	50	121	121	9.33	9.33	38	38	246	246
Oct 2006	BD	BD	BD	BD	5	5	50	50	107	107	11.1	11.1	21	21	197	197
Nov 2006	BD	BD	BD	BD	5	5	50	50	123	123	12	12	16	16	224	224
Dec 2006	BD	BD	BD	BD	5	5	50	50	134	134	10.7	10.7	19	19	221	221
Jan 2007	BD	BD	BD	BD	5	5	50	50	106	106	8.75	8.75	23	23	199	199
Feb 2007	BD	BD	BD	BD	5	5	50	50	101	101	7.87	7.87	36	36	171	171
Mar 2007	BD	BD	0.2	0.2	5	5	50	50	97.1	97.1	8.73	8.73	37	37	180	180
Apr 2007	BD	BD	BD	BD	5	5	196	196	85	85	9.75	9.75	294	294	154	154
May 2007	BD	BD	BD	BD	5	5	55	55	73.9	73.9	11.4	11.4	120	120	155	155
Jun 2007	BD	BD	BD	BD	5	5	50	50	88.6	88.6	10.3	10.3	46	46	165	165
Jul 2007	BD	BD	BD	BD	5	5	50	50	102	102	9.78	9.78	24	24	203	203
Aug 2007	BD	BD	BD	BD	5	5	50	50	108	108	9.5	9.5	21	21	191	191

Compliance Point 002 - A

DMR	Total Recoverable Selenium		Total Recoverable Mercury		Total Recoverable Arsenic		Total Recoverable Iron		Total Sulfate		Total Sodium		Total Recoverable Aluminum		TDS	
	30-Day Avg	Daily Max	30-Day Avg	Daily Max	30-Day Avg	Daily Max	30-Day Avg	Daily Max	30-Day Avg	Daily Max	30-Day Avg	Daily Max	30-Day Avg	Daily Max	30-Day Avg	Daily Max
	4.6 ug/L	ug/L	1 ug/L	2 ug/L	ug/L	ug/L	ug/L	ug/L	mg/L	mg/L	mg/L	mg/L	ug/L	ug/L	mg/L	mg/L
Sep 2007	BD	BD	BD	BD	5	5	50	50	118	118	9.08	9.08	54	54	231	231
Oct 2007	BD	BD	BD	BD	5	5	50	50	111	111	7.26	7.26	20	20	201	201
Nov 2007	BD	BD	BD	BD	5	5	50	50	111	111	7.17	7.17	23	23	193	193
Dec 2007	BD	BD	BD	BD	5	5	50	50	101	101	7.3	7.3	20	20	179	179
Jan 2008	BD	BD	BD	BD	5	5	50	50	103	103	7.45	7.45	35	35	194	194
Feb 2008	BD	BD	BD	BD	5	5	50	50	98.4	98.4	6.7	6.7	25	25	194	194
Mar 2008	BD	BD	BD	BD	5	5	50	50	97.1	97.1	7.55	7.55	26	26	186	186
Apr 2008	BD	BD	BD	BD	5	5	87	87	97.8	97.8	8.72	8.72	130	130	171	171
May 2008	BD	BD	BD	BD	5	5	221	221	57.2	57.2	7.82	7.82	339	339	115	115
Jun 2008	BD	BD	BD	BD	5	5	61.7	61.7	71	71	7.53	7.53	88.1	88.1	136	136
Jul 2008	BD	BD	BD	BD	5	5	50	50	77	77	7.82	7.82	23	23	159	159
Aug 2008	BD	BD	BD	BD	5	5	50	50	83.2	83.2	8.03	8.03	52	52	168	168
Sep 2008	BD	BD	BD	BD	5	5	50	50	86.8	86.8	9.45	9.45	37	37	187	187
Oct 2008	BD	BD	BD	BD	5	5	50	50	77.7	77.7	6.48	6.48	37	37	162	162
Nov 2008	BD	BD	BD	BD	5	5	89	89	71.8	71.8	8.1	8.1	130	130	143	143
Dec 2008	BD	BD	BD	BD	5	5	50	50	77.7	77.7	8.9	8.9	41	41	161	161
Jan 2009	0	BD	BD	BD	5	5	50	50	77.9	77.9	7.1	7.1	34	34	160	160
Feb 2009	0	BD	BD	BD	BD	BD	79	79	80.2	80.2	7.56	7.56	113	113	146	146
Mar 2009	0	BD	BD	BD	BD	BD	BD	BD	77.3	77.3	8.1	8.1	65	65	144	144
Apr 2009	0	BD	BD	BD	BD	BD	384	384	43.5	43.5	6.63	6.63	675	675	94	94
May 2009	0	BD	BD	BD	BD	BD	193	193	46.4	46.4	7.94	7.94	344	344	107	107
Jun 2009	0	BD	BD	BD	BD	BD	165	165	48.6	48.6	7.23	7.23	267	267	118	118
Jul 2009	0	BD	BD	BD	BD	BD	55	55	47.9	47.9	7.69	7.69	78	78	147	147
Aug 2009	0	BD	BD	BD	BD	BD	50	50	49.6	49.6	7.64	7.64	76	76	152	152

Compliance Point 002 - A

DMR	Total Recoverable Selenium		Total Recoverable Mercury		Total Recoverable Arsenic		Total Recoverable Iron		Total Sulfate		Total Sodium		Total Recoverable Aluminum		TDS	
	30-Day Avg	Daily Max	30-Day Avg	Daily Max	30-Day Avg	Daily Max	30-Day Avg	Daily Max	30-Day Avg	Daily Max	30-Day Avg	Daily Max	30-Day Avg	Daily Max	30-Day Avg	Daily Max
	4.6 ug/L	ug/L	1 ug/L	2 ug/L	ug/L	ug/L	ug/L	ug/L	mg/L	mg/L	mg/L	mg/L	ug/L	ug/L	mg/L	mg/L
Sep 2009	0	BD	BD	BD	BD	BD	62	62	77	77	7.02	7.02	71	71	178	178
Oct 2009	0	BD	BD	BD	BD	BD	78	78	83.6	83.6	6.79	6.79	61	61	143	143
Nov 2009	0	BD	BD	BD	BD	BD	54	54	92.1	92.1	9.28	9.28	88	88	176	176
Dec 2009	0	BD	BD	BD	BD	BD	62	62	94.8	94.8	8.33	8.33	54	54	150	150
Jan 2010	0	BD	BD	BD	BD	BD	BD	BD	89.8	89.8	7.06	7.06	59	59	193	193
Feb 2010	0	BD	BD	BD	BD	BD	BD	BD	83.3	83.3	7.2	7.2	45	45	195	195
Mar 2010	0	BD	BD	BD	BD	BD	100	100	71.3	71.3	7.51	7.51	124	124	144	144
Apr 2010	0	BD	BD	BD	BD	BD	624	624	57.5	57.5	8.74	8.74	995	995	125	125
May 2010	0	BD	BD	BD	BD	BD	260	260	53.7	53.7	8.81	8.81	399	399	130	130
Jun 2010	0	BD	BD	BD	BD	BD	95	95	57.5	57.5	8.88	8.88	137	137	110	110
Jul 2010	0	BD	BD	BD	BD	BD	52	52	66.8	66.8	8.54	8.54	81	81	116	116
Aug 2010	0	BD	BD	BD	BD	BD	58	58	70.9	70.9	12.7	12.7	68	68	162	162
Sep 2010	ND	ND	ND	ND	ND	ND	ND	ND	ND	ND	ND	ND	ND	ND	ND	ND
Oct 2010	0	5	0.2	0.2	5	5	77	77	80.3	80.3	9.2	9.2	106	106	160	160
Nov 2010	0	BD	BD	BD	BD	BD	182	182	86.5	86.5	8.43	8.43	137	137	150	150
Dec 2010	0	BD	BD	BD	BD	BD	138	138	85.8	85.8	8.1	8.1	133	133	135	135
Jan 2011	0	BD	BD	BD	BD	BD	98	98	83	83	7.37	7.37	96	96	148	148
Feb 2011	0	BD	BD	BD	BD	BD	82	82	164	164	11.4	11.4	81	81	151	151
Mar 2011	0	BD	BD	BD	BD	BD	225	225	69.3	69.3	8.94	8.94	285	285	137	137
Apr 2011	0	BD	BD	BD	BD	BD	214	214	66	66	8.94	8.94	283	283	128	128
May 2011	0	BD	BD	BD	BD	BD	687	687	39	39	7.38	7.38	1,080	1,080	106	106
Jun 2011	0	BD	BD	BD	BD	BD	162	162	54.1	54.1	7.95	7.95	238	238	116	116
Jul 2011	0	BD	BD	BD	BD	BD	91	91	63.9	63.9	7.88	7.88	101	101	119	119
Aug 2011	0	BD	BD	BD	BD	BD	80	80	74.7	74.7	8.06	8.06	89	89	151	151

Compliance Point 002 - A

DMR	Total Recoverable Selenium		Total Recoverable Mercury		Total Recoverable Arsenic		Total Recoverable Iron		Total Sulfate		Total Sodium		Total Recoverable Aluminum		TDS	
	30-Day Avg	Daily Max	30-Day Avg	Daily Max	30-Day Avg	Daily Max	30-Day Avg	Daily Max	30-Day Avg	Daily Max	30-Day Avg	Daily Max	30-Day Avg	Daily Max	30-Day Avg	Daily Max
	4.6 ug/L	ug/L	1 ug/L	2 ug/L	ug/L	ug/L	ug/L	ug/L	mg/L	mg/L	mg/L	mg/L	ug/L	ug/L	mg/L	mg/L
Sep 2011	0	BD	BD	BD	BD	BD	159	159	90.3	90.3	7.53	7.53	149	149	179	179
Oct 2011	0	BD	BD	BD	BD	BD	84	84	85	85	7.21	7.21	85	85	191	191
Nov 2011	0	BD	BD	BD	BD	BD	74	74	88.2	88.2	6.59	6.59	63	63	192	192
Dec 2011	0	BD	BD	BD	BD	BD	59	59	88	88	5.93	5.93	78	78	176	176
Jan 2012	0	BD	BD	BD	BD	BD	51	51	90.3	90.3	5.8	5.8	57	57	180	180
Feb 2012	BD	BD	BD	BD	BD	BD	BD	BD	91.3	91.3	6.49	6.49	45	45	175	175
Mar 2012	0	BD	BD	BD	BD	BD	179	179	84.5	84.5	6.14	6.14	156	156	167	167
Apr 2012	0	BD	BD	BD	BD	BD	60	60	77.3	77.3	9.64	9.64	87	87	158	158
May 2012	0	BD	BD	BD	BD	BD	74	74	72.1	72.1	9.81	9.81	105	105	140	140
Jun 2012	0	BD	BD	BD	BD	BD	BD	BD	77.9	77.9	9.25	9.25	40	40	150	150
Jul 2012	0	BD	BD	BD	BD	BD	BD	BD	94.7	94.7	8.73	8.73	27	27	167	167
Aug 2012	0	BD	BD	BD	BD	BD	BD	BD	99.1	99.1	10.1	10.1	40	40	208	208
Sep 2012	0	BD	BD	BD	BD	BD	BD	BD	111	111	8.27	8.27	28	28	203	203
Oct 2012	0	BD	BD	BD	BD	BD	BD	BD	110	110	9.14	9.14	22	22	186	186
Nov 2012	0	BD	BD	BD	BD	BD	BD	BD	106	106	7.03	7.03	26	26	199	199
Dec 2012	0	BD	BD	BD	BD	BD	BD	BD	104	104	6.82	6.82	19	19	172	172
Jan 2013	0	BD	BD	BD	BD	BD	BD	BD	96.5	96.5	6.14	6.14	15	15	173	173
Feb 2013	0	BD	BD	BD	BD	BD	BD	BD	98.6	98.6	6.1	6.1	13	13	182	182
Mar 2013	0	BD	BD	BD	BD	BD	BD	BD	104	104	5.86	5.86	17	17	193	193
Apr 2013	0	BD	BD	BD	BD	BD	BD	BD	86.2	86.2	9.52	9.52	63	63	143	143
May 2013	0	BD	BD	BD	BD	BD	63	63	69.7	69.7	8.03	8.03	99	99	140	140
Jun 2013	0	BD	BD	BD	BD	BD	BD	BD	64.5	64.5	8.72	8.72	59	59	130	130
Jul 2013	0	BD	BD	BD	BD	BD	BD	BD	73	73	8.51	8.51	43	43	149	149
Aug 2013	0	5	BD	0.2	BD	5	BD	50	80.5	80.5	8.56	8.56	92	92	171	171

Compliance Point 002 - A

DMR	Total Recoverable Selenium		Total Recoverable Mercury		Total Recoverable Arsenic		Total Recoverable Iron		Total Sulfate		Total Sodium		Total Recoverable Aluminum		TDS	
	30-Day Avg	Daily Max	30-Day Avg	Daily Max	30-Day Avg	Daily Max	30-Day Avg	Daily Max	30-Day Avg	Daily Max	30-Day Avg	Daily Max	30-Day Avg	Daily Max	30-Day Avg	Daily Max
	4.6 ug/L	ug/L	1 ug/L	2 ug/L	ug/L	ug/L	ug/L	ug/L	mg/L	mg/L	mg/L	mg/L	ug/L	ug/L	mg/L	mg/L
Sep 2013	0	5	BD	0.2	BD	5	BD	50	91.2	91.2	8.7	8.7	38	38	191	191
Oct 2013	0	5	BD	0.2	BD	5	518	518	47.1	47.1	6.45	6.45	818	818	100	100
Nov 2013	0	5	BD	0.2	BD	5	126	126	57.1	57.1	7.41	7.41	160	160	90	90
Dec 2013	0	5	BD	0.2	BD	5	BD	50	73.7	73.7	6.6	6.6	45	45	123	123
Jan 2014	0	5	BD	0.2	BD	5	85	85	71.2	71.2	6.23	6.23	89	89	112	112
Feb 2014	FR	FR	FR	FR	FR	FR	FR	FR	FR	FR	FR	FR	FR	FR	FR	FR
Mar 2014	0	5	BD	0.2	BD	5	122	122	50.1	50.1	7.02	7.02	188	188	95	95
Apr 2014	BD	5	BD	0.2	BD	5	803	803	45.9	45.9	6.92	6.92	1,220	1,220	109	109
May 2014	0	5	BD	0.2	8	8	245	245	35.7	35.7	6.8	6.8	416	416	96	96
Jun 2014	0	5	BD	0.2	BD	5	126	126	42.3	42.3	7.46	7.46	206	206	100	100
Jul 2014	0	5	BD	0.2	BD	5	BD	50	63.7	63.7	7.83	7.83	86	86	113	113
Aug 2014	0	5	BD	0.2	BD	5	BD	50	69.7	69.7	7.97	7.97	64	64	155	155
Sep 2014	0	5	BD	0.2	BD	5	BD	50	79.6	79.6	7.41	7.41	53	53	150	150
Oct 2014	0	5	BD	0.2	BD	5	85	85	63.1	63.1	7.59	7.59	135	135	122	122
Nov 2014	0	5	BD	0.2	BD	5	BD	50	NR	NR	NR	NR	58	58	102	102
Dec 2014	0	5	BD	0.2	BD	5	BD	50	NR	NR	NR	NR	61	61	139	139
Jan 2015	0	5	BD	0.2	BD	5	60	60	76.2	76.2	6.69	6.69	60	60	137	137
Feb 2015	0	5	BD	0.2	BD	5	466	466	NR	NR	NR	NR	752	752	130	130
Mar 2015	0	5	BD	0.2	BD	5	202	202	NR	NR	NR	NR	224	224	109	109
Apr 2015	0	5	BD	0.2	BD	5	578	578	56.3	56.3	8.09	8.09	1,070	1,070	129	129
May 2015	0	5	BD	0.2	5	5	1,700	1,700	NR	NR	NR	NR	2,250	2,250	109	109
Jun 2015	0	5	BD	0.2	BD	5	397	397	NR	NR	NR	NR	646	646	96	96
Jul 2015	0	5	BD	0.2	BD	5	305	305	46.4	46.4	7.16	7.16	600	600	103	103
Aug 2015	0	5	BD	0.2	BD	5	70	70	NR	NR	NR	NR	133	133	137	137

Compliance Point 002 - A

DMR	Total Recoverable Selenium		Total Recoverable Mercury		Total Recoverable Arsenic		Total Recoverable Iron		Total Sulfate		Total Sodium		Total Recoverable Aluminum		TDS	
	30-Day Avg	Daily Max	30-Day Avg	Daily Max	30-Day Avg	Daily Max	30-Day Avg	Daily Max	30-Day Avg	Daily Max	30-Day Avg	Daily Max	30-Day Avg	Daily Max	30-Day Avg	Daily Max
	4.6 ug/L	ug/L	1 ug/L	2 ug/L	ug/L	ug/L	ug/L	ug/L	mg/L	mg/L	mg/L	mg/L	ug/L	ug/L	mg/L	mg/L
Sep 2015	0	5	BD	0.2	BD	5	56	56	NR	NR	NR	NR	73	73	138	138
Oct 2015	0	5	BD	0.2	BD	5	BD	50	71.8	71.8	7.83	7.83	45	45	135	135
Nov 2015	0	5	BD	0.2	BD	5	BD	50	NR	NR	NR	NR	54	54	123	123
Dec 2015	0	5	BD	0.2	BD	5	BD	50	NR	NR	NR	NR	40	40	138	138
Jan 2016	0	5	BD	0.2	BD	5	BD	50	74.7	74.7	6.05	6.05	36	36	141	141
Feb 2016	0	5	BD	0.2	BD	5	150	150	NR	NR	NR	NR	217	217	137	137
Mar 2016	0	5	BD	0.2	BD	5	195	195	NR	NR	NR	NR	313	313	122	122
Apr 2016	0	5	BD	0.2	BD	5	366	366	54.9	54.9	8.46	8.46	712	712	118	118
May 2016	0	5	BD	0.2	BD	5	168	168	NR	NR	NR	NR	309	309	106	106
Jun 2016	0	5	BD	0.2	BD	5	BD	50	NR	NR	NR	NR	78	78	135	135
Jul 2016	0	5	BD	0.2	BD	5	BD	50	77.3	77.3	8.01	8.01	23	23	167	167
Aug 2016	0	5	BD	0.2	BD	5	BD	50	NR	NR	NR	NR	22	22	175	175
Sep 2016	0	5	BD	0.2	BD	5	138	138	NR	NR	NR	NR	135	135	162	162
Oct 2016	0	5	BD	0.2	BD	5	BD	50	90.3	90.3	7.76	7.76	39	39	170	170
Nov 2016	0	5	BD	0.2	BD	5	BD	50	NR	NR	NR	NR	17	17	174	174
Dec 2016	0	5	BD	0.2	BD	5	BD	50	NR	NR	NR	NR	28	28	164	164
Jan 2017	0	5	BD	0.2	BD	5	BD	50	89.8	89.8	6.04	6.04	17	17	178	178
Feb 2017	0	5	BD	0.2	BD	5	BD	50	NR	NR	NR	NR	20	20	152	152
Mar 2017	0	5	BD	0.2	BD	5	BD	50	NR	NR	NR	NR	48	48	139	139
Apr 2017	0	5	BD	0.2	BD	5	135	135	72.4	72.4	8	8	208	208	134	134
May 2017	0	5	BD	0.2	BD	5	155	155	NR	NR	NR	NR	227	227	134	134
Jun 2017	0	5	BD	0.2	BD	5	BD	50	NR	NR	NR	NR	259	259	139	139
Jul 2017	0	5	BD	0.2	BD	5	BD	50	79.8	79.8	9.29	9.29	52	52	146	146
Aug 2017	0	5	BD	0.2	5	5	84	84	NR	NR	NR	NR	79	79	180	180

Compliance Point 002 - A

DMR	Total Recoverable Selenium		Total Recoverable Mercury		Total Recoverable Arsenic		Total Recoverable Iron		Total Sulfate		Total Sodium		Total Recoverable Aluminum		TDS	
	30-Day Avg	Daily Max	30-Day Avg	Daily Max	30-Day Avg	Daily Max	30-Day Avg	Daily Max	30-Day Avg	Daily Max	30-Day Avg	Daily Max	30-Day Avg	Daily Max	30-Day Avg	Daily Max
	4.6 ug/L	ug/L	1 ug/L	2 ug/L	ug/L	ug/L	ug/L	ug/L	mg/L	mg/L	mg/L	mg/L	ug/L	ug/L	mg/L	mg/L
Sep 2017	0	5	BD	0.2	BD	5	BD	50	NR	NR	NR	NR	26	26	203	203
Oct 2017	0	5	BD	0.2	BD	5	131	131	91	91	6.16	6.16	124	124	185	185
Nov 2017	0	5	BD	0.2	BD	5	BD	50	NR	NR	NR	NR	28	28	176	176
Dec 2017	0	5	BD	0.2	BD	5	BD	50	NR	NR	NR	NR	24	24	155	155
Jan 2018	FR	FR	FR	FR	FR	FR	FR	FR	FR	FR	FR	FR	FR	FR	FR	FR
Feb 2018	0	5	BD	0.2	BD	5	BD	50	91.2	91.2	6.53	6.53	29	29	167	167
Mar 2018	0	5	BD	0.2	BD	5	BD	50	NR	NR	NR	NR	26	26	158	158
Apr 2018	0	5	BD	0.2	BD	5	628	628	62.1	62.1	8.92	8.92	1,050	1,050	122	122
May 2018	0	5	BD	0.2	BD	5	573	573	NR	NR	NR	NR	1,000	1,000	120	120
Jun 2018	0	5	BD	0.2	BD	5	78	78	NR	NR	NR	NR	164	164	92	92
Jul 2018	0	5	BD	0.2	BD	5	350	350	54.6	54.6	9	9	659	659	114	114
Aug 2018	0	5	BD	0.2	BD	5	77	77	NR	NR	NR	NR	97	97	123	123
Sep 2018	0	5	BD	0.2	BD	5	62	62	NR	NR	NR	NR	75	75	158	158
Oct 2018	0	5	BD	0.2	BD	5	78	78	76.1	76.1	8.38	8.38	106	106	148	148
Nov 2018	0	5	BD	0.2	BD	5	99	99	NR	NR	NR	NR	113	113	137	137
Dec 2018	0	5	BD	0.2	BD	5	59	59	NR	NR	NR	NR	67	67	89	89
Jan 2019	0	5	BD	0.2	BD	5	50	50	80.4	80.4	7.62	7.62	57	57	149	149
Feb 2019	0	5	BD	0.2	BD	5	BD	50	NR	NR	NR	NR	32	32	140	140
Mar 2019	FR	FR	FR	FR	FR	FR	FR	FR	FR	FR	FR	FR	FR	FR	FR	FR
Apr 2019	0	5	BD	0.2	BD	5	1,090	1,090	40.2	40.2	6.67	6.67	2,290	2,290	63	63
May 2019	0	5	BD	0.2	BD	5	344	344	NR	NR	NR	NR	571	571	82	82
Jun 2019	0	5	BD	0.2	BD	5	235	235	NR	NR	NR	NR	490	490	92	92
Jul 2019	0	5	BD	0.2	BD	5	163	163	51.8	51.8	7.38	7.38	265	265	130	130
Aug 2019	0	5	BD	0.2	BD	5	106	106	NR	NR	NR	NR	152	152	132	132

Compliance Point 002 - A

DMR	Total Recoverable Selenium		Total Recoverable Mercury		Total Recoverable Arsenic		Total Recoverable Iron		Total Sulfate		Total Sodium		Total Recoverable Aluminum		TDS	
	30-Day Avg	Daily Max	30-Day Avg	Daily Max	30-Day Avg	Daily Max	30-Day Avg	Daily Max	30-Day Avg	Daily Max	30-Day Avg	Daily Max	30-Day Avg	Daily Max	30-Day Avg	Daily Max
	4.6 ug/L	ug/L	1 ug/L	2 ug/L	ug/L	ug/L	ug/L	ug/L	mg/L	mg/L	mg/L	mg/L	ug/L	ug/L	mg/L	mg/L
Sep 2019	0	5	BD	0.2	BD	5	93	93	NR	NR	NR	NR	110	110	163	163
Oct 2019	0	5	BD	0.2	BD	5	156	156	69.1	69.1	6.9	6.9	215	215	112	112
Nov 2019	0	5	BD	0.2	BD	5	522	522	NR	NR	NR	NR	846	846	121	121
Dec 2019	WR	WR	WR	WR	WR	WR	WR	WR	WR	WR	WR	WR	WR	WR	WR	WR
Jan 2020	WR	WR	WR	WR	WR	WR	WR	WR	NR	NR	NR	NR	WR	WR	WR	WR
Feb 2020	WR	WR	WR	WR	WR	WR	WR	WR	NR	NR	NR	NR	WR	WR	WR	WR
Mar 2020	WR	WR	WR	WR	WR	WR	WR	WR	WR	WR	WR	WR	WR	WR	WR	WR
Apr 2020	WR	WR	WR	WR	WR	WR	WR	WR	WR	WR	WR	WR	WR	WR	WR	WR
May 2020	0	5	BD	0.2	BD	5	728	728	43.9	43.9	7.18	7.18	1,170	1,170	58	58
Jun 2020	0	5	BD	0.2	BD	5	188	188	NR	NR	NR	NR	327	327	99	99
Jul 2020	0	5	BD	0.2	BD	5	123	123	62.6	62.6	7.23	7.23	156	156	120	120
Aug 2020	0	5	BD	0.2	BD	5	119	119	NR	NR	NR	NR	121	121	113	113
Sep 2020	0	5	BD	0.2	BD	5	127	127	NR	NR	NR	NR	127	127	153	153
Oct 2020	0	5	BD	0.2	BD	5	108	108	92.5	92.5	6.72	6.72	130	130	167	167
Nov 2020	0	5	BD	0.2	BD	5	BD	50	NR	NR	NR	NR	44	44	145	145
Dec 2020	0	5	BD	0.2	BD	5	BD	50	NR	NR	NR	NR	BD	10	154	154
Jan 2021	0	5	BD	0.2	BD	5	BD	50	84.6	84.6	5.76	5.76	50	50	153	153
Feb 2021	0	5	BD	0.2	BD	5	56	56	NR	NR	NR	NR	55	55	137	137
Mar 2021	FR	FR	FR	FR	FR	FR	FR	FR	FR	FR	FR	FR	FR	FR	FR	FR
Apr 2021	0	5	BD	0.2	BD	5	321	321	60.4	60.4	7.85	7.85	437	437	117	117
May 2021	0	5	BD	0.2	BD	5	180	180	NR	NR	NR	NR	292	292	123	123
Jun 2021	0	5	BD	0.2	BD	5	62	62	NR	NR	NR	NR	103	103	106	106
Jul 2021	0	5	BD	0.2	BD	5	BD	50	76.7	76.7	9.68	9.68	32	32	136	136
Aug 2021	0	5	BD	0.2	BD	5	61	61	NR	NR	NR	NR	53	53	160	160

Compliance Point 002 - A

DMR	Total Recoverable Selenium		Total Recoverable Mercury		Total Recoverable Arsenic		Total Recoverable Iron		Total Sulfate		Total Sodium		Total Recoverable Aluminum		TDS	
	30-Day Avg	Daily Max	30-Day Avg	Daily Max	30-Day Avg	Daily Max	30-Day Avg	Daily Max	30-Day Avg	Daily Max	30-Day Avg	Daily Max	30-Day Avg	Daily Max	30-Day Avg	Daily Max
	4.6 ug/L	ug/L	1 ug/L	2 ug/L	ug/L	ug/L	ug/L	ug/L	mg/L	mg/L	mg/L	mg/L	ug/L	ug/L	mg/L	mg/L
Sep 2021	0	5	BD	0.2	BD	5	65	65	NR	NR	NR	BD	72	72	173	173
Oct 2021	0	5	BD	0.2	BD	5	62	62	108	108	9.35	9.35	54	54	185	185
Nov 2021	0	5	BD	0.2	BD	5	358	358	NR	NR	NR	NR	131	131	124	124
Dec 2021	0	5	BD	0.2	BD	5	BD	50	NR	NR	NR	NR	31	31	123	123
Jan 2022	EC	EC	EC	EC	EC	EC	EC	EC	EC	EC	EC	EC	EC	EC	EC	EC
Feb 2022	EC	EC	EC	EC	EC	EC	EC	EC	EC	EC	EC	EC	EC	EC	EC	EC
Mar 2022	0	5	BD	0.2	BD	5	70	70	75.9	75.9	8.36	8.36	91	91	127	127
Apr 2022	0	5	BD	0.2	BD	5	BD	50	73.9	73.9	7.97	7.97	93	93	126	126
May 2022	0	5	BD	0.2	BD	5	429	429	NR	NR	NR	NR	780	780	113	113
Jun 2022	0	5	BD	0.2	BD	5	119	119	NR	NR	NR	NR	206	206	71	71
Jul 2022	0	5	BD	0.2	BD	5	51	51	56.9	56.9	19.9	19.9	86	86	118	118
Aug 2022	0	5	BD	0.2	BD	5	BD	50	NR	NR	NR	NR	33	33	126	126
Sep 2022	BD	BD	BD	0.2	BD	5	BD	50	NR	NR	NR	NR	35	35	137	137
Oct 2022	BD	BD	BD	0.2	BD	5	51	51	95.2	95.2	8.45	8.45	58	58	181	181
Nov 2022	EC	EC	EC	EC	EC	EC	EC	EC	EC	EC	EC	EC	EC	EC	EC	EC
Dec 2022	EC	EC	EC	EC	EC	EC	EC	EC	EC	EC	EC	EC	EC	EC	EC	EC

Compliance Point 002 - W

DMR	Acute Ceriodaphnia Daily Max pass=0;fail=1	Acute Pimephales Promelas Daily Max pass=0;fail=1
Sep 2005	0	NR
Dec 2005	NR	0
Mar 2006	0	NR
Jun 2006	NR	0
Sep 2006	0	NR
Dec 2006	NR	0
Mar 2007	0	NR
Jun 2007	NR	0
Sep 2007	0	NR
Dec 2007	NR	0
Mar 2008	0	0
Jun 2008	NR	0
Sep 2008	0	NR
Dec 2008	NR	0
Mar 2009	0	NR
Jun 2009	NR	0
Sep 2009	0	NR
Dec 2009	NR	0
Mar 2010	0	NR
Jun 2010	NR	0
Sep 2010	ND	ND
Dec 2010	NR	0
Mar 2011	0	0

DMR	Acute Ceriodaphnia Daily Max pass=0;fail=1	Acute Pimephales Promelas Daily Max pass=0;fail=1
Jun 2011	NR	0
Sep 2011	0	NR
Dec 2011	NR	0
Mar 2012	0	0
Jun 2012	NR	0
Sep 2012	0	NR
Dec 2012	NR	0
Mar 2013	0	NR
Jun 2013	NR	0
Sep 2013	0	NR
Dec 2013	NR	0
Mar 2014	0	NR
Jun 2014	NR	0
Sep 2014	0	NR
Dec 2014	NR	0
Mar 2015	0	NR
Jun 2015	NR	0
Sep 2015	0	NR
Dec 2015	NR	0
Mar 2016	0	NR
Jun 2016	NR	0
Sep 2016	0	NR
Dec 2016	NR	0

DMR	Acute Ceriodaphnia Daily Max pass=0;fail=1	Acute Pimephales Promelas Daily Max pass=0;fail=1
Mar 2017	0	NR
Jun 2017	NR	0
Sep 2017	0	NR
Dec 2017	NR	0
Mar 2018	0	NR
Jun 2018	NR	0
Sep 2018	0	NR
Dec 2018	NR	0
Mar 2019	0	NR
Jun 2019	NR	0
Sep 2019	0	NR
Dec 2019	NR	WR
Mar 2020	WR	NR
Jun 2020	NR	0
Sep 2020	0	NR
Dec 2020	NR	0
Mar 2021	0	NR
Jun 2021	NR	0
Sep 2021	0	NR
Dec 2021	NR	0
Mar 2022	0	NR
Jun 2022	NR	0
Sep 2022	0	NR
Dec 2022	NR	EC

Compliance Point 003 - A

DMR	Flow rate		Water Temperature		pH		TSS		Ammonia-Nitrogen		Oil and grease visual	TPH	Total Recoverable Copper	
	Daily Min	Daily Max	30-Day Avg	Daily Max	Daily Min	Daily Max	30-Day Avg	Daily Max	30-Day Avg	Daily Max	Daily Max	Daily Max	30-Day Avg	Daily Max
	MGD	MGD	deg C	deg C	6 SU	9 SU	90 mg/L	158 mg/L	mg/L	mg/L	N=0;Y=1	10 mg/L	150 ug/L	300 ug/L
Jul 2005	0	0	11.8	11.8	7.05	7.05	10	10	0	0.05	0	NR	0	5
Aug 2005	0	0	12.9	12.9	7.57	7.57	10	10	0	0.05	0	NR	0	5
Sep 2005	0	0	11.2	11.2	7.17	7.17	10	10	0	0.05	0	NR	0	5
Oct 2005	0	0	6.7	6.7	7.3	7.3	10	10	BD	BD	0	NR	BD	BD
Nov 2005	0	0	3	3	7.34	7.34	10	10	0.05	0.05	0	NR	5	5
Dec 2005	0	0	1.4	1.4	7.06	7.06	10	10	0.05	0.05	0	NR	5	5
Jan 2006	0	0	1.2	1.2	7.1	7.1	10	10	0.05	0.05	0	NR	5	5
Feb 2006	0	0	1.3	1.3	6.98	6.98	10	10	0.05	0.05	0	NR	5	5
Mar 2006	0	0	1	1	7.1	7.1	10	10	0.05	0.05	0	NR	5	5
Apr 2006	0.31	0.31	2.4	2.4	7.63	7.63	10	10	0.05	0.05	0	NR	5	5
May 2006	0.07	0.07	8.8	8.8	7.66	7.66	10	10	0.05	0.05	0	NR	5	5
Jun 2006	0.04	0.04	8.8	8.8	7.25	7.25	10	10	0.05	0.05	0	NR	5	5
Jul 2006	0.01	0.01	10.9	10.9	7.44	7.44	10	10	0.05	0.05	0	NR	5	5
Aug 2006	0	0	12.4	12.4	7.49	7.49	10	10	0.05	0.05	0	NR	5	5
Sep 2006	0.01	0.01	7.8	7.8	7.24	7.24	10	10	0.05	0.05	0	NR	5	5
Oct 2006	0.01	0.01	4.6	4.6	7.06	7.06	10	10	0.05	0.05	0	NR	5	5
Nov 2006	0.02	0.02	3	3	7	7	10	10	0.05	0.05	0	NR	5	5
Dec 2006	0.01	0.01	1.5	1.5	7.01	7.01	10	10	0.05	0.05	0	NR	5	5
Jan 2007	0	0	0.1	0.1	7.03	7.03	10	10	0.05	0.05	0	NR	5	5
Feb 2007	0	0	1.2	1.2	6.94	6.94	10	10	0.05	0.05	0	NR	5	5
Mar 2007	0.01	0.01	1.5	1.5	6.83	6.83	10	10	0.05	0.05	0	NR	5	5
Apr 2007	0.24	0.24	3.3	3.3	6.97	6.97	10	10	0.05	0.05	0	NR	5	5
May 2007	0.12	0.12	6.5	6.5	7.61	7.61	10	10	0.05	0.05	0	NR	5	5
Jun 2007	0.16	0.16	8	8	7.51	7.51	10	10	0.05	0.05	0	NR	5	5
Jul 2007	0.02	0.02	11.9	11.9	7.28	7.28	10	10	0.05	0.05	0	NR	5	5

Compliance Point 003 - A

DMR	Flow rate		Water Temperature		pH		TSS		Ammonia-Nitrogen		Oil and grease visual	TPH	Total Recoverable Copper	
	Daily Min	Daily Max	30-Day Avg	Daily Max	Daily Min	Daily Max	30-Day Avg	Daily Max	30-Day Avg	Daily Max	Daily Max	Daily Max	30-Day Avg	Daily Max
	MGD	MGD	deg C	deg C	6 SU	9 SU	90 mg/L	158 mg/L	mg/L	mg/L	N=0;Y=1	10 mg/L	150 ug/L	300 ug/L
Aug 2007	0.01	0.01	14.2	14.2	7.32	7.32	10	10	0.05	0.05	0	NR	5	5
Sep 2007	0.01	0.01	9.3	9.3	7.24	7.24	10	10	0.05	0.05	0	NR	5	5
Oct 2007	0.01	0.01	5.2	5.2	7.66	7.66	10	10	0.05	0.05	0	NR	5	5
Nov 2007	0	0	3.6	3.6	7.58	7.58	10	10	0.05	0.05	0	NR	5	5
Dec 2007	0	0	1.1	1.1	7.38	7.38	10	10	0.05	0.05	0	NR	5	5
Jan 2008	0	0	0.2	0.2	7.06	7.06	10	10	0.05	0.05	0	NR	5	5
Feb 2008	0	0	0.6	0.6	6.87	6.87	10	10	0.05	0.05	0	NR	5	5
Mar 2008	0	0	0.4	0.4	7.27	7.27	10	10	0.05	0.05	0	NR	5	5
Apr 2008	0.11	0.11	0.9	0.9	7.31	7.31	10	10	0.05	0.05	0	NR	5	5
May 2008	0.55	0.55	7.1	7.1	7.72	7.72	10	10	0.05	0.05	0	NR	5	5
Jun 2008	0.27	0.27	7.2	7.2	7.76	7.76	10	10	0.05	0.05	0	NR	5	5
Jul 2008	0.04	0.04	9.6	9.6	7.62	7.62	10	10	0.05	0.05	0	NR	5	5
Aug 2008	0.03	0.03	10.8	10.8	7.7	7.7	10	10	0.05	0.05	0	NR	5	5
Sep 2008	0.01	0.01	8.8	8.8	7.86	7.86	10	10	0.05	0.05	0	NR	5	5
Oct 2008	0.01	0.01	4.1	4.1	7.8	7.8	10	10	0.05	0.05	0	NR	5	5
Nov 2008	0.01	0.01	3.3	3.3	7.75	7.75	10	10	0.05	0.05	0	NR	5	5
Dec 2008	0.01	0.01	-0.2	-0.2	7.7	7.7	10	10	0.05	0.05	0	NR	5	5
Jan 2009	0.01	0.01	0.8	0.8	7.73	7.73	10	10	0.05	0.05	0	NR	5	5
Feb 2009	0.01	0.01	1.9	1.9	7.35	7.35	BD	BD	BD	BD	0	NR	BD	BD
Mar 2009	0.02	0.02	1.2	1.2	7.69	7.69	BD	BD	BD	BD	0	NR	BD	BD
Apr 2009	1.02	1.02	3.4	3.4	7.66	7.66	BD	BD	BD	BD	0	NR	BD	BD
May 2009	0.21	0.21	5.2	5.2	8.05	8.05	BD	BD	BD	BD	0	NR	BD	BD
Jun 2009	0.18	0.18	7.1	7.1	7.72	7.72	BD	BD	BD	BD	0	NR	BD	BD
Jul 2009	0.03	0.03	9.7	9.7	7.6	7.6	BD	BD	BD	BD	0	NR	BD	BD
Aug 2009	0.02	0.02	11.3	11.3	7.95	7.95	BD	BD	BD	BD	0	NR	BD	BD

Compliance Point 003 - A

DMR	Flow rate		Water Temperature		pH		TSS		Ammonia-Nitrogen		Oil and grease visual	TPH	Total Recoverable Copper	
	Daily Min	Daily Max	30-Day Avg	Daily Max	Daily Min	Daily Max	30-Day Avg	Daily Max	30-Day Avg	Daily Max	Daily Max	Daily Max	30-Day Avg	Daily Max
	MGD	MGD	deg C	deg C	6 SU	9 SU	90 mg/L	158 mg/L	mg/L	mg/L	N=0;Y=1	10 mg/L	150 ug/L	300 ug/L
Sep 2009	0.01	0.01	8.9	8.9	7.76	7.76	BD	BD	BD	BD	0	NR	BD	BD
Oct 2009	0.01	0.01	2.9	2.9	7.75	7.75	BD	BD	BD	BD	0	NR	BD	BD
Nov 2009	0.07	0.07	3.8	3.8	7.27	7.27	BD	BD	BD	BD	0	NR	BD	BD
Dec 2009	0.01	0.01	0.3	0.3	7.9	7.9	BD	BD	BD	BD	0	NR	BD	BD
Jan 2010	0.01	0.01	1.6	1.6	7.72	7.72	BD	BD	BD	BD	0	NR	BD	BD
Feb 2010	0.01	0.01	0.5	0.5	7.86	7.86	BD	BD	BD	BD	0	NR	BD	BD
Mar 2010	0.02	0.02	2	2	7.52	7.52	BD	BD	BD	BD	0	NR	BD	BD
Apr 2010	0.51	0.51	4.1	4.1	7.26	7.26	BD	BD	BD	BD	0	NR	BD	BD
May 2010	0.31	0.31	3.5	3.5	7.78	7.78	BD	BD	BD	BD	0	NR	BD	BD
Jun 2010	0.15	0.15	7.9	7.9	7.97	7.97	BD	BD	BD	BD	0	NR	BD	BD
Jul 2010	0.04	0.04	10	10	7.69	7.69	BD	BD	BD	BD	0	NR	BD	BD
Aug 2010	0.03	0.03	11.1	11.1	7.84	7.84	BD	BD	BD	BD	0	NR	BD	BD
Sep 2010	ND	ND	ND	ND	ND	ND	ND	ND	ND	ND	ND	ND	ND	ND
Oct 2010	0.04	0.04	6	6	7.53	7.53	10	10	0.05	0.05	0	NR	5	5
Nov 2010	0.02	0.02	1.8	1.8	7.24	7.24	BD	BD	BD	BD	0	NR	BD	BD
Dec 2010	0.01	0.01	2	2	7.26	7.26	BD	BD	BD	BD	0	NR	BD	BD
Jan 2011	0.06	0.06	1	1	7.07	7.07	BD	BD	BD	BD	0	NR	BD	BD
Feb 2011	0	0	0.5	0.5	7.19	7.19	BD	BD	BD	BD	0	NR	8	8
Mar 2011	0.02	0.02	2.9	2.9	7.51	7.51	BD	BD	BD	BD	0	NR	BD	BD
Apr 2011	0.19	0.19	2.1	2.1	7.52	7.52	BD	BD	BD	BD	0	NR	BD	BD
May 2011	0.47	0.47	7	7	7.63	7.63	BD	BD	BD	BD	0	NR	BD	BD
Jun 2011	0.12	0.12	7.3	7.3	7.87	7.87	BD	BD	BD	BD	0	NR	BD	BD
Jul 2011	0.06	0.06	11.7	11.7	7.86	7.86	BD	BD	BD	BD	0	NR	BD	BD
Aug 2011	0.02	0.02	11.9	11.9	7.7	7.7	BD	BD	BD	BD	0	NR	BD	BD
Sep 2011	0.01	0.01	10	10	7.91	7.91	BD	BD	BD	BD	0	NR	BD	BD

Compliance Point 003 - A

DMR	Flow rate		Water Temperature		pH		TSS		Ammonia-Nitrogen		Oil and grease visual	TPH	Total Recoverable Copper	
	Daily Min	Daily Max	30-Day Avg	Daily Max	Daily Min	Daily Max	30-Day Avg	Daily Max	30-Day Avg	Daily Max	Daily Max	Daily Max	30-Day Avg	Daily Max
	MGD	MGD	deg C	deg C	6 SU	9 SU	90 mg/L	158 mg/L	mg/L	mg/L	N=0;Y=1	10 mg/L	150 ug/L	300 ug/L
Oct 2011	0.01	0.01	7.5	7.5	7.9	7.9	BD	BD	BD	BD	0	NR	BD	BD
Nov 2011	0.01	0.01	2.5	2.5	7.83	7.83	BD	BD	BD	BD	0	NR	BD	BD
Dec 2011	0.01	0.01	1.7	1.7	7.54	7.54	BD	BD	BD	BD	0	NR	BD	BD
Jan 2012	0.01	0.01	2.9	2.9	7.77	7.77	BD	BD	BD	BD	0	NR	BD	BD
Feb 2012	0	0	1.5	1.5	7.66	7.66	BD	BD	BD	BD	0	NR	BD	BD
Mar 2012	0.02	0.02	3.4	3.4	7.5	7.5	BD	BD	BD	BD	0	NR	BD	BD
Apr 2012	0.03	0.03	4.9	4.9	7.79	7.79	BD	BD	BD	BD	0	NR	BD	BD
May 2012	0.05	0.05	5.9	5.9	7.69	7.69	BD	BD	BD	BD	0	NR	BD	BD
Jun 2012	0.02	0.02	10.2	10.2	7.58	7.58	BD	BD	BD	BD	0	NR	BD	BD
Jul 2012	0	0	13.1	13.1	7.61	7.61	BD	BD	BD	BD	0	NR	BD	BD
Aug 2012	0.01	0.01	11.8	11.8	7.72	7.72	BD	BD	BD	BD	0	NR	BD	BD
Sep 2012	0	0	11.6	11.6	7.76	7.76	BD	BD	BD	BD	0	NR	BD	BD
Oct 2012	0	0	8.6	8.6	7.75	7.75	BD	BD	BD	BD	0	NR	BD	BD
Nov 2012	0	0	4.5	4.5	7.75	7.75	BD	BD	BD	BD	0	NR	BD	BD
Dec 2012	0	0	2.4	2.4	7.76	7.76	BD	BD	BD	BD	0	NR	BD	BD
Jan 2013	0.01	0.01	1.8	1.8	7.82	7.82	BD	BD	BD	BD	0	NR	BD	BD
Feb 2013	0.01	0.01	1.4	1.4	7.61	7.61	BD	BD	BD	BD	0	NR	BD	BD
Mar 2013	0	0	0.7	0.7	7.72	7.72	BD	BD	BD	BD	0	NR	BD	BD
Apr 2013	0.03	0.03	1.2	1.2	7.93	7.93	BD	BD	BD	BD	0	NR	BD	BD
May 2013	0.25	0.25	7.2	7.2	7.8	7.8	BD	BD	BD	BD	0	NR	BD	BD
Jun 2013	0.15	0.15	8.2	8.2	7.88	7.88	BD	BD	BD	BD	0	NR	BD	BD
Jul 2013	0.04	0.04	11.1	11.1	7.82	7.82	BD	BD	BD	BD	0	NR	BD	BD
Aug 2013	0.02	0.02	12.1	12.1	7.85	7.85	BD	10	BD	0.05	0	NR	BD	5
Sep 2013	0.01	0.01	10.7	10.7	7.95	7.95	BD	10	BD	0.05	0	NR	BD	5
Oct 2013	0.74	0.74	5.9	5.9	8.02	8.02	BD	10	BD	0.05	0	NR	BD	5

Compliance Point 003 - A

DMR	Flow rate		Water Temperature		pH		TSS		Ammonia-Nitrogen		Oil and grease visual	TPH	Total Recoverable Copper	
	Daily Min	Daily Max	30-Day Avg	Daily Max	Daily Min	Daily Max	30-Day Avg	Daily Max	30-Day Avg	Daily Max	Daily Max	Daily Max	30-Day Avg	Daily Max
	MGD	MGD	deg C	deg C	6 SU	9 SU	90 mg/L	158 mg/L	mg/L	mg/L	N=0;Y=1	10 mg/L	150 ug/L	300 ug/L
Nov 2013	0.24	0.24	4	4	8.04	8.04	BD	10	BD	0.05	0	NR	BD	5
Dec 2013	0.03	0.03	1.2	1.2	8.05	8.05	BD	10	BD	0.05	0	NR	BD	5
Jan 2014	0.01	0.01	0.4	0.4	8.07	8.07	BD	10	BD	0.05	0	NR	BD	5
Feb 2014	0.01	0.01	0.3	0.3	7.97	7.97	BD	10	BD	0.05	0	NR	BD	5
Mar 2014	0.02	0.02	1.1	1.1	8.01	8.01	BD	10	BD	0.05	0	NR	BD	5
Apr 2014	0.81	0.81	3.8	3.8	7.69	7.69	BD	10	BD	0.05	0	NR	BD	5
May 2014	0.32	0.32	6.5	6.5	7.84	7.84	BD	10	BD	0.05	0	NR	BD	5
Jun 2014	0.07	0.07	7.6	7.6	7.9	7.9	BD	10	BD	0.05	0	NR	BD	5
Jul 2014	0.04	0.04	9.7	9.7	7.85	7.85	BD	10	BD	0.05	0	NR	BD	5
Aug 2014	0.02	0.02	10.9	10.9	7.92	7.92	BD	10	BD	0.05	0	NR	BD	5
Sep 2014	0.01	0.01	8.4	8.4	7.96	7.96	BD	10	BD	0.05	0	NR	BD	5
Oct 2014	0.04	0.04	7.3	7.3	7.85	7.85	BD	10	BD	0.05	0	NR	BD	5
Nov 2014	0.01	0.01	1.1	1.1	7.95	7.95	BD	10	BD	0.05	0	NR	BD	5
Dec 2014	0.01	0.01	2	2	7.93	7.93	16	16	BD	0.05	0	NR	BD	5
Jan 2015	0.01	0.01	0.5	0.5	8.02	8.02	BD	10	BD	0.05	0	NR	BD	5
Feb 2015	0.06	0.06	1.7	1.7	7.77	7.77	BD	10	BD	0.05	0	NR	BD	5
Mar 2015	0.04	0.04	1.5	1.5	7.76	7.76	BD	10	BD	0.05	0	NR	BD	5
Apr 2015	0.07	0.07	3.1	3.1	7.76	7.76	BD	10	BD	0.05	0	NR	BD	5
May 2015	0.69	0.69	5.3	5.3	7.85	7.85	BD	10	BD	0.05	0	NR	BD	5
Jun 2015	0.16	0.16	8.6	8.6	7.78	7.78	BD	10	BD	0.05	0	NR	BD	5
Jul 2015	0.1	0.1	10.6	10.6	7.7	7.7	BD	10	BD	0.05	0	NR	BD	5
Aug 2015	0.04	0.04	11.8	11.8	7.74	7.74	BD	10	BD	0.05	0	NR	BD	5
Sep 2015	0.03	0.03	10.2	10.2	7.8	7.8	BD	10	BD	0.05	0	NR	BD	5
Oct 2015	0.02	0.02	7.8	7.8	7.95	7.95	14	14	BD	0.05	0	NR	BD	5
Nov 2015	0.02	0.02	3.1	3.1	8.01	8.01	BD	10	BD	0.05	0	NR	BD	5

Compliance Point 003 - A

DMR	Flow rate		Water Temperature		pH		TSS		Ammonia-Nitrogen		Oil and grease visual	TPH	Total Recoverable Copper	
	Daily Min	Daily Max	30-Day Avg	Daily Max	Daily Min	Daily Max	30-Day Avg	Daily Max	30-Day Avg	Daily Max	Daily Max	Daily Max	30-Day Avg	Daily Max
	MGD	MGD	deg C	deg C	6 SU	9 SU	90 mg/L	158 mg/L	mg/L	mg/L	N=0;Y=1	10 mg/L	150 ug/L	300 ug/L
Dec 2015	0.02	0.02	2.9	2.9	8	8	BD	10	BD	0.05	0	NR	BD	5
Jan 2016	0.01	0.01	1.1	1.1	7.96	7.96	BD	10	BD	0.05	0	NR	BD	5
Feb 2016	0.02	0.02	1.7	1.7	7.83	7.83	BD	10	BD	0.05	0	NR	BD	5
Mar 2016	0.04	0.04	2	2	7.7	7.7	BD	10	BD	0.05	0	NR	BD	5
Apr 2016	0.1	0.1	3.4	3.4	7.62	7.62	BD	10	BD	0.05	0	NR	BD	5
May 2016	0.05	0.05	5.3	5.3	7.75	7.75	BD	10	BD	0.05	0	NR	BD	5
Jun 2016	0.03	0.03	9.8	9.8	7.95	7.95	BD	10	BD	0.05	0	NR	BD	5
Jul 2016	0.01	0.01	10	10	7.95	7.95	BD	10	BD	0.05	0	NR	BD	5
Aug 2016	0.01	0.01	9.9	9.9	7.91	7.91	BD	10	BD	0.05	0	NR	BD	5
Sep 2016	0.01	0.01	10.2	10.2	7.53	7.53	BD	10	BD	0.05	0	NR	BD	5
Oct 2016	0.01	0.01	6.4	6.4	8.04	8.04	BD	10	BD	0.05	0	NR	BD	5
Nov 2016	0.01	0.01	4.7	4.7	7.99	7.99	BD	10	BD	0.05	0	NR	BD	5
Dec 2016	0.01	0.01	0.4	0.4	8.03	8.03	BD	10	BD	0.05	0	NR	BD	5
Jan 2017	0.01	0.01	0.5	0.5	8.07	8.07	BD	10	BD	0.05	0	NR	BD	5
Feb 2017	0.01	0.01	1.2	1.2	7.93	7.93	BD	10	BD	0.05	0	NR	BD	5
Mar 2017	0.01	0.01	1.3	1.3	8.07	8.07	BD	10	BD	0.05	0	NR	BD	5
Apr 2017	0.02	0.02	2.3	2.3	7.86	7.86	BD	10	BD	0.05	0	NR	BD	5
May 2017	0.05	0.05	6.9	6.9	7.9	7.9	BD	10	BD	0.05	0	NR	BD	5
Jun 2017	0.06	0.06	8.6	8.6	7.76	7.76	BD	10	BD	0.05	0	NR	BD	5
Jul 2017	0.01	0.01	11.9	11.9	7.71	7.71	BD	10	BD	0.05	0	NR	BD	5
Aug 2017	0.01	0.01	11.5	11.5	7.8	7.8	BD	10	BD	0.05	0	NR	BD	5
Sep 2017	0.01	0.01	9.3	9.3	7.74	7.74	BD	10	BD	0.05	0	NR	BD	5
Oct 2017	0	0	4.7	4.7	7.82	7.82	BD	10	BD	0.05	0	NR	BD	5
Nov 2017	0.01	0.01	2.2	2.2	7.96	7.96	BD	10	BD	0.05	0	NR	BD	5
Dec 2017	0	0	1.7	1.7	8.03	8.03	BD	10	BD	0.05	0	NR	BD	5

Compliance Point 003 - A

DMR	Flow rate		Water Temperature		pH		TSS		Ammonia-Nitrogen		Oil and grease visual	TPH	Total Recoverable Copper	
	Daily Min	Daily Max	30-Day Avg	Daily Max	Daily Min	Daily Max	30-Day Avg	Daily Max	30-Day Avg	Daily Max	Daily Max	Daily Max	30-Day Avg	Daily Max
	MGD	MGD	deg C	deg C	6 SU	9 SU	90 mg/L	158 mg/L	mg/L	mg/L	N=0;Y=1	10 mg/L	150 ug/L	300 ug/L
Jan 2018	0	0	0.7	0.7	7.91	7.91	BD	10	BD	0.05	0	NR	BD	5
Feb 2018	0	0	1.1	1.1	8.03	8.03	BD	10	BD	0.05	0	NR	BD	5
Mar 2018	0.01	0.01	0.6	0.6	8.05	8.05	BD	10	BD	0.05	0	NR	BD	5
Apr 2018	0.09	0.09	1.8	1.8	7.73	7.73	BD	10	BD	0.05	0	NR	BD	5
May 2018	0.06	0.06	6.2	6.2	7.8	7.8	BD	10	BD	0.05	0	NR	BD	5
Jun 2018	0.03	0.03	9.3	9.3	7.84	7.84	BD	10	BD	0.05	0	NR	BD	5
Jul 2018	0.07	0.07	10.9	10.9	7.82	7.82	BD	10	BD	0.05	0	NR	BD	5
Aug 2018	0.02	0.02	10.9	10.9	7.87	7.87	BD	10	BD	0.05	0	NR	BD	5
Sep 2018	0.01	0.01	11	11	7.94	7.94	BD	10	BD	0.05	0	NR	BD	5
Oct 2018	0.01	0.01	4.6	4.6	7.92	7.92	BD	10	BD	0.05	0	NR	BD	5
Nov 2018	0.01	0.01	2.7	2.7	7.89	7.89	BD	10	BD	0.05	0	NR	BD	5
Dec 2018	0.01	0.01	0.8	0.8	7.8	7.8	BD	10	BD	0.05	0	NR	BD	5
Jan 2019	0.01	0.01	1.1	1.1	7.95	7.95	BD	10	BD	0.05	0	NR	BD	5
Feb 2019	0	0	0.3	0.3	7.85	7.85	BD	10	BD	0.05	0	NR	BD	5
Mar 2019	FR	FR	0.6	0.6	7.67	7.67	BD	10	BD	0.05	0	NR	BD	5
Apr 2019	0.27	0.27	4.1	4.1	7.29	7.29	BD	10	BD	0.05	0	NR	BD	5
May 2019	0.18	0.18	4.2	4.2	7.31	7.31	BD	10	BD	0.05	0	NR	BD	5
Jun 2019	0.07	0.07	7.5	7.5	7.81	7.81	BD	10	BD	0.05	0	NR	BD	5
Jul 2019	0.05	0.05	10.9	10.9	7.76	7.76	BD	10	BD	0.05	0	NR	BD	5
Aug 2019	0.01	0.01	10.4	10.4	7.73	7.73	BD	10	BD	0.05	0	NR	BD	5
Sep 2019	0.01	0.01	10	10	7.84	7.84	BD	10	BD	0.05	0	NR	BD	5
Oct 2019	0.02	0.02	5.3	5.3	7.9	7.9	BD	10	BD	0.05	0	NR	BD	5
Nov 2019	0.06	0.06	2.6	2.6	7.51	7.51	BD	10	BD	0.05	0	NR	BD	5
Dec 2019	WR	WR	WR	WR	WR	WR	WR	WR	WR	WR	WR	WR	WR	WR
Jan 2020	WR	WR	WR	WR	WR	WR	WR	WR	WR	WR	WR	WR	WR	WR

Compliance Point 003 - A

DMR	Flow rate		Water Temperature		pH		TSS		Ammonia-Nitrogen		Oil and grease visual	TPH	Total Recoverable Copper	
	Daily Min	Daily Max	30-Day Avg	Daily Max	Daily Min	Daily Max	30-Day Avg	Daily Max	30-Day Avg	Daily Max	Daily Max	Daily Max	30-Day Avg	Daily Max
	MGD	MGD	deg C	deg C	6 SU	9 SU	90 mg/L	158 mg/L	mg/L	mg/L	N=0;Y=1	10 mg/L	150 ug/L	300 ug/L
Feb 2020	WR	WR	WR	WR	WR	WR	WR	WR	WR	WR	WR	WR	WR	WR
Mar 2020	WR	WR	WR	WR	WR	WR	WR	WR	WR	WR	WR	WR	WR	WR
Apr 2020	WR	WR	WR	WR	WR	WR	WR	WR	WR	WR	WR	WR	WR	WR
May 2020	0.17	0.17	6.5	6.5	7.71	7.71	BD	10	BD	0.05	0	NR	BD	5
Jun 2020	0.07	0.07	9.6	9.6	7.66	7.66	BD	10	BD	0.05	0	NR	BD	5
Jul 2020	0	0	10.1	10.1	7.6	7.6	BD	10	BD	0.05	0	NR	BD	5
Aug 2020	0.01	0.01	11.3	11.3	7.42	7.42	BD	10	BD	0.05	0	NR	BD	5
Sep 2020	0.01	0.01	9.4	9.4	7.84	7.84	11	11	BD	0.05	0	NR	BD	5
Oct 2020	0.01	0.01	6.8	6.8	7.87	7.87	BD	10	BD	0.05	0	NR	BD	5
Nov 2020	0.01	0.01	1.8	1.8	7.95	7.95	BD	10	BD	0.05	0	NR	BD	5
Dec 2020	0	0	1.2	1.2	7.94	7.94	BD	10	BD	0.05	0	NR	BD	5
Jan 2021	0	0	0.6	0.6	7.97	7.97	BD	10	BD	0.05	0	NR	BD	5
Feb 2021	0	0	0.9	0.9	8.05	8.05	BD	10	BD	0.05	0	NR	BD	5
Mar 2021	0	0	1.2	1.2	7.65	7.65	BD	10	BD	0.05	0	NR	BD	5
Apr 2021	0.08	0.08	1.9	1.9	7.59	7.59	BD	10	BD	0.05	0	NR	BD	5
May 2021	0.03	0.03	4.3	4.3	7.57	7.57	BD	10	BD	0.05	0	NR	BD	5
Jun 2021	0.02	0.02	9.9	9.9	7.26	7.26	BD	10	BD	0.05	0	NR	BD	5
Jul 2021	0.01	0.01	11.6	11.6	7.61	7.61	BD	10	BD	0.05	0	NR	BD	5
Aug 2021	0	0	13	13	7.46	7.46	BD	10	BD	0.05	0	NR	BD	5
Sep 2021	0	0	10.4	10.4	7.65	7.65	NR	10	BD	0.05	0	NR	BD	5
Oct 2021	0	0	7.7	7.7	7.74	7.74	BD	10	BD	0.05	0	NR	BD	5
Nov 2021	0.01	0.01	2.8	2.8	7.67	7.67	BD	10	BD	0.05	0	NR	BD	5
Dec 2021	0.01	0.01	2.1	2.1	7.63	7.63	BD	10	BD	0.05	0	NR	BD	5
Jan 2022	0	0	0.3	0.3	7.76	7.76	BD	10	BD	0.05	0	NR	BD	5
Feb 2022	0	0	0.3	0.3	7.56	7.56	BD	10	BD	0.05	0	NR	BD	5

Compliance Point 003 - A

DMR	Flow rate		Water Temperature		pH		TSS		Ammonia-Nitrogen		Oil and grease visual	TPH	Total Recoverable Copper	
	Daily Min	Daily Max	30-Day Avg	Daily Max	Daily Min	Daily Max	30-Day Avg	Daily Max	30-Day Avg	Daily Max	Daily Max	Daily Max	30-Day Avg	Daily Max
	MGD	MGD	deg C	deg C	6 SU	9 SU	90 mg/L	158 mg/L	mg/L	mg/L	N=0;Y=1	10 mg/L	150 ug/L	300 ug/L
Mar 2022	0.01	0.01	1.5	1.5	7.52	7.52	BD	10	BD	0.05	0	NR	BD	5
Apr 2022	0.01	0.01	1.5	1.5	7.4	7.4	BD	10	BD	0.05	0	NR	BD	5
May 2022	0.05	0.05	6.4	6.4	7.35	7.35	BD	10	BD	0.05	0	NR	BD	5
Jun 2022	0.06	0.06	10.5	10.5	7.29	7.29	BD	10	BD	0.05	0	NR	BD	5
Jul 2022	0.01	0.01	14.4	14.4	7.22	7.22	BD	10	BD	0.05	0	NR	BD	5
Aug 2022	0.01	0.01	13.3	13.3	7.47	7.47	BD	10	BD	0.05	0	NR	BD	5
Sep 2022	0	0	10.1	10.1	7.87	7.87	BD	10	BD	BD	0	NR	BD	5
Oct 2022	0.01	0.01	9.4	9.4	7.75	7.75	BD	10	BD	BD	0	NR	BD	5
Nov 2022	0	0	2.3	2.3	7.94	7.94	BD	10	BD	BD	0	NR	BD	5
Dec 2022	EC	EC	EC	EC	EC	EC	EC	EC	EC	EC	EC	EC	EC	EC

Compliance Point 003 - A

DMR	WAD Cyanide		Total Recoverable Chromium		Nitrate-Nitrogen		Total Recoverable Nickel		Total Hardness		Total Recoverable Lead		Total Recoverable Silver		Total Recoverable Zinc		Total Recoverable Cadmium	
	30-Day Avg	Daily Max	30-Day Avg	Daily Max	30-Day Avg	Daily Max	30-Day Avg	Daily Max	30-Day Avg	Daily Min	30-Day Avg	Daily Max	30-Day Avg	Daily Max	30-Day Avg	Daily Max	30-Day Avg	Daily Max
	ug/L	22 ug/L	ug/L	ug/L	mg/L	mg/L	ug/L	ug/L	mg/L	mg/L	300 ug/L	600 ug/L	ug/L	ug/L	750 ug/L	1500 ug/L	50 ug/L	100 ug/L
Jul 2005	0	10	0	1	0	0.05	0	5	149	AR	0	1	0	1	0	50	0	1
Aug 2005	0	10	0	1	0	0.05	0	5	139	AR	1	1	0	1	0	50	0	1
Sep 2005	0	10	0	1	0.08	0.08	0	5	135	AR	0	1	0	1	0	50	0	1
Oct 2005	BD	BD	BD	BD	BD	BD	BD	BD	138	AR	BD	BD	BD	BD	BD	BD	BD	BD
Nov 2005	10	10	1	1	0.05	0.05	5	5	121	121	1	1	1	1	50	50	1	1
Dec 2005	10	10	1	1	0.08	0.08	5	5	125	125	1	1	1	1	50	50	1	1

Compliance Point 003 - A

DMR	WAD Cyanide		Total Recoverable Chromium		Nitrate-Nitrogen		Total Recoverable Nickel		Total Hardness		Total Recoverable Lead		Total Recoverable Silver		Total Recoverable Zinc		Total Recoverable Cadmium	
	30-Day Avg	Daily Max	30-Day Avg	Daily Max	30-Day Avg	Daily Max	30-Day Avg	Daily Max	30-Day Avg	Daily Min	30-Day Avg	Daily Max	30-Day Avg	Daily Max	30-Day Avg	Daily Max	30-Day Avg	Daily Max
	ug/L	22 ug/L	ug/L	ug/L	mg/L	mg/L	ug/L	ug/L	mg/L	mg/L	300 ug/L	600 ug/L	ug/L	ug/L	750 ug/L	1500 ug/L	50 ug/L	100 ug/L
Jan 2006	10	10	1	1	0.07	0.07	5	5	118	118	1	1	1	1	50	50	1	1
Feb 2006	10	10	1	1	0.06	0.06	5	5	118	118	1	1	1	1	50	50	1	1
Mar 2006	10	10	1	1	0.05	0.05	5	5	118	118	1	1	1	1	55	55	1	1
Apr 2006	10	10	1	1	0.08	0.08	5	5	81.2	81.2	1	1	1	1	50	50	1	1
May 2006	10	10	1	1	0.05	0.05	5	5	74.8	74.8	1	1	1	1	50	50	1	1
Jun 2006	10	10	1	1	0.05	0.05	5	5	117	117	1	1	1	1	50	50	1	1
Jul 2006	10	10	1	1	0.05	0.05	5	5	129	129	1	1	1	1	50	50	1	1
Aug 2006	10	10	1	1	0.05	0.05	5	5	129	129	1	1	1	1	50	50	1	1
Sep 2006	10	10	1	1	0.05	0.05	5	5	127	127	1	1	1	1	50	50	1	1
Oct 2006	10	10	1	1	0.05	0.05	5	5	135	135	1	1	1	1	50	50	1	1
Nov 2006	10	10	1	1	0.05	0.05	5	5	154	154	1	1	1	1	50	50	1	1
Dec 2006	10	10	1	1	0.05	0.05	5	5	134	134	1	1	1	1	50	50	1	1
Jan 2007	10	10	1	1	0.05	0.05	5	5	137	137	1	1	1	1	50	50	1	1
Feb 2007	10	10	1	1	0.07	0.07	5	5	120	120	1	1	1	1	50	50	1	1
Mar 2007	10	10	1	1	0.05	0.05	5	5	125	125	1	1	1	1	50	50	1	1
Apr 2007	10	10	1	1	0.05	0.05	5	5	72.4	72.4	1	1	1	1	50	50	1	1
May 2007	10	10	1	1	0.05	0.05	5	5	89.2	89.2	1	1	1	1	50	50	1	1
Jun 2007	10	10	1	1	0.05	0.05	5	5	124	124	1	1	1	1	50	50	1	1
Jul 2007	10	10	1	1	0.05	0.05	5	5	126	126	1	1	1	1	50	50	1	1
Aug 2007	10	10	1	1	0.05	0.05	5	5	114	114	1	1	1	1	50	50	1	1
Sep 2007	10	10	1	1	0.05	0.05	5	5	144	144	1	1	1	1	50	50	1	1
Oct 2007	10	10	1	1	0.05	0.05	5	5	131	131	1	1	1	1	50	50	1	1
Nov 2007	10	10	1	1	0.05	0.05	5	5	118	118	1	1	1	1	50	50	1	1
Dec 2007	10	10	1	1	0.05	0.05	5	5	115	115	1	1	1	1	50	50	1	1

Compliance Point 003 - A

DMR	WAD Cyanide		Total Recoverable Chromium		Nitrate-Nitrogen		Total Recoverable Nickel		Total Hardness		Total Recoverable Lead		Total Recoverable Silver		Total Recoverable Zinc		Total Recoverable Cadmium	
	30-Day Avg	Daily Max	30-Day Avg	Daily Max	30-Day Avg	Daily Max	30-Day Avg	Daily Max	30-Day Avg	Daily Min	30-Day Avg	Daily Max	30-Day Avg	Daily Max	30-Day Avg	Daily Max	30-Day Avg	Daily Max
	ug/L	22 ug/L	ug/L	ug/L	mg/L	mg/L	ug/L	ug/L	mg/L	mg/L	300 ug/L	600 ug/L	ug/L	ug/L	750 ug/L	1500 ug/L	50 ug/L	100 ug/L
Jan 2008	10	10	1	1	0.05	0.05	5	5	101	101	1	1	1	1	60	60	1	1
Feb 2008	10	10	1	1	0.05	0.05	5	5	107	107	1	1	1	1	50	50	1	1
Mar 2008	10	10	1	1	0.08	0.08	5	5	102	102	1	1	1	1	50	50	1	1
Apr 2008	10	10	1	1	0.13	0.13	5	5	143	143	1	1	1	1	50	50	1	1
May 2008	10	10	1	1	0.05	0.05	5	5	71.9	71.9	1	1	1	1	50	50	1	1
Jun 2008	10	10	1	1	0.05	0.05	5	5	78.6	78.6	1	1	1	1	50	50	1	1
Jul 2008	10	10	1	1	0.05	0.05	5	5	118	118	1	1	1	1	50	50	1	1
Aug 2008	10	10	1	1	0.05	0.05	5	5	123	123	1	1	1	1	50	50	1	1
Sep 2008	BD	BD	1	1	0.05	0.05	5	5	119	119	1	1	1	1	50	50	1	1
Oct 2008	BD	BD	1	1	0.05	0.05	5	5	126	126	1	1	1	1	50	50	1	1
Nov 2008	10	10	1	1	0.05	0.05	5	5	84	84	1	1	1	1	50	50	1	1
Dec 2008	10	10	1	1	0.05	0.05	5	5	139	139	1	1	1	1	50	50	1	1
Jan 2009	BD	BD	1	1	0.08	0.08	5	5	132	132	1	1	1	1	50	50	1	1
Feb 2009	BD	BD	BD	BD	0.09	0.09	BD	BD	129	129	BD	BD	BD	BD	BD	BD	BD	BD
Mar 2009	BD	BD	BD	BD	0.08	0.08	BD	BD	135	135	BD	BD	BD	BD	BD	BD	BD	BD
Apr 2009	BD	BD	BD	BD	0.16	0.16	BD	BD	74.6	74.6	BD	BD	BD	BD	77	77	BD	BD
May 2009	BD	BD	BD	BD	BD	BD	BD	BD	71.1	71.1	BD	BD	BD	BD	BD	BD	BD	BD
Jun 2009	BD	BD	BD	BD	BD	BD	BD	BD	87.5	87.5	BD	BD	BD	BD	BD	BD	BD	BD
Jul 2009	BD	BD	BD	BD	0.06	0.06	BD	BD	115	115	BD	BD	BD	BD	BD	BD	BD	BD
Aug 2009	BD	BD	BD	BD	BD	BD	BD	BD	118	118	BD	BD	BD	BD	BD	BD	BD	BD
Sep 2009	BD	BD	BD	BD	0.09	0.09	BD	BD	119	119	BD	BD	BD	BD	BD	BD	BD	BD
Oct 2009	BD	BD	BD	BD	0.08	0.08	BD	BD	118	118	BD	BD	BD	BD	BD	BD	BD	BD
Nov 2009	BD	BD	BD	BD	BD	BD	BD	BD	141	141	BD	BD	BD	BD	BD	BD	BD	BD
Dec 2009	BD	BD	BD	BD	0.12	0.12	BD	BD	122	122	1	1	BD	BD	BD	BD	BD	BD

Compliance Point 003 - A

DMR	WAD Cyanide		Total Recoverable Chromium		Nitrate-Nitrogen		Total Recoverable Nickel		Total Hardness		Total Recoverable Lead		Total Recoverable Silver		Total Recoverable Zinc		Total Recoverable Cadmium	
	30-Day Avg	Daily Max	30-Day Avg	Daily Max	30-Day Avg	Daily Max	30-Day Avg	Daily Max	30-Day Avg	Daily Min	30-Day Avg	Daily Max	30-Day Avg	Daily Max	30-Day Avg	Daily Max	30-Day Avg	Daily Max
	ug/L	22 ug/L	ug/L	ug/L	mg/L	mg/L	ug/L	ug/L	mg/L	mg/L	300 ug/L	600 ug/L	ug/L	ug/L	750 ug/L	1500 ug/L	50 ug/L	100 ug/L
Jan 2010	BD	BD	BD	BD	0.14	0.14	BD	BD	119	119	BD	BD	BD	BD	BD	BD	BD	BD
Feb 2010	BD	BD	BD	BD	0.16	0.16	BD	BD	104	104	BD	BD	BD	BD	BD	BD	BD	BD
Mar 2010	BD	BD	BD	BD	0.15	0.15	BD	BD	107	107	BD	BD	BD	BD	BD	BD	BD	BD
Apr 2010	BD	BD	2	2	0.14	0.14	BD	BD	62.4	62.4	1	1	BD	BD	BD	BD	BD	BD
May 2010	BD	BD	BD	BD	0.06	0.06	BD	BD	79.1	79.1	BD	BD	BD	BD	BD	BD	BD	BD
Jun 2010	BD	BD	BD	BD	BD	BD	BD	BD	87.3	87.3	BD	BD	BD	BD	BD	BD	BD	BD
Jul 2010	BD	BD	BD	BD	0.07	0.07	BD	BD	105	105	BD	BD	BD	BD	BD	BD	BD	BD
Aug 2010	BD	BD	BD	BD	0.06	0.06	BD	BD	116	116	1	1	BD	BD	58	58	1	1
Sep 2010	ND	ND	ND	ND	ND	ND	ND	ND	ND	ND	ND	ND	ND	ND	ND	ND	ND	ND
Oct 2010	10	10	1	1	0.05	0.05	5	5	108	108	1	1	1	1	50	50	1	1
Nov 2010	BD	BD	BD	BD	0.09	0.09	BD	BD	123	123	BD	BD	BD	BD	BD	BD	BD	BD
Dec 2010	BD	BD	BD	BD	0.12	0.12	BD	BD	117	117	BD	BD	BD	BD	BD	BD	BD	BD
Jan 2011	BD	BD	BD	BD	0.15	0.15	BD	BD	112	112	BD	BD	BD	BD	BD	BD	BD	BD
Feb 2011	BD	BD	BD	BD	0.26	0.26	BD	BD	114	114	BD	BD	BD	BD	BD	BD	BD	BD
Mar 2011	BD	BD	1	1	0.12	0.12	BD	BD	96	96	BD	BD	BD	BD	BD	BD	BD	BD
Apr 2011	BD	BD	BD	BD	0.11	0.11	BD	BD	88.5	88.5	BD	BD	BD	BD	BD	BD	BD	BD
May 2011	BD	BD	BD	BD	0.06	0.06	BD	BD	64.7	64.7	BD	BD	BD	BD	BD	BD	BD	BD
Jun 2011	BD	BD	BD	BD	BD	BD	BD	BD	87.9	87.9	BD	BD	BD	BD	BD	BD	BD	BD
Jul 2011	BD	BD	BD	BD	0.06	0.55	BD	BD	116	116	BD	BD	BD	BD	BD	BD	BD	BD
Aug 2011	BD	BD	BD	BD	0.06	0.06	BD	BD	118	118	1	1	BD	BD	BD	BD	BD	BD
Sep 2011	BD	BD	BD	BD	0.08	0.08	BD	BD	118	118	BD	BD	BD	BD	BD	BD	BD	BD
Oct 2011	BD	BD	BD	BD	BD	BD	BD	BD	114	114	BD	BD	BD	BD	BD	BD	BD	BD
Nov 2011	BD	BD	BD	BD	0.08	0.08	BD	BD	119	119	BD	BD	BD	BD	BD	BD	BD	BD
Dec 2011	BD	BD	BD	BD	0.08	0.08	BD	BD	99.5	99.5	BD	BD	BD	BD	BD	BD	BD	BD

Compliance Point 003 - A

DMR	WAD Cyanide		Total Recoverable Chromium		Nitrate-Nitrogen		Total Recoverable Nickel		Total Hardness		Total Recoverable Lead		Total Recoverable Silver		Total Recoverable Zinc		Total Recoverable Cadmium	
	30-Day Avg	Daily Max	30-Day Avg	Daily Max	30-Day Avg	Daily Max	30-Day Avg	Daily Max	30-Day Avg	Daily Min	30-Day Avg	Daily Max	30-Day Avg	Daily Max	30-Day Avg	Daily Max	30-Day Avg	Daily Max
	ug/L	22 ug/L	ug/L	ug/L	mg/L	mg/L	ug/L	ug/L	mg/L	mg/L	300 ug/L	600 ug/L	ug/L	ug/L	750 ug/L	1500 ug/L	50 ug/L	100 ug/L
Jan 2012	BD	BD	BD	BD	0.11	0.11	BD	BD	110	110	BD	BD	BD	BD	BD	BD	BD	BD
Feb 2012	BD	BD	BD	BD	0.21	0.21	BD	BD	125	125	BD	BD	BD	BD	BD	BD	BD	BD
Mar 2012	BD	BD	BD	BD	0.25	0.25	BD	BD	118	118	BD	BD	BD	BD	BD	BD	BD	BD
Apr 2012	BD	BD	BD	BD	0.08	0.08	BD	BD	114	114	BD	BD	BD	BD	BD	BD	BD	BD
May 2012	BD	BD	BD	BD	BD	BD	BD	BD	106	106	BD	BD	BD	BD	BD	BD	BD	BD
Jun 2012	BD	BD	BD	BD	BD	BD	BD	BD	123	123	BD	BD	BD	BD	BD	BD	BD	BD
Jul 2012	BD	BD	BD	BD	BD	BD	BD	BD	131	131	BD	BD	BD	BD	BD	BD	BD	BD
Aug 2012	BD	BD	BD	BD	BD	BD	BD	BD	138	138	BD	BD	BD	BD	BD	BD	BD	BD
Sep 2012	BD	BD	BD	BD	0.07	0.07	BD	BD	138	138	BD	BD	BD	BD	BD	BD	BD	BD
Oct 2012	BD	BD	BD	BD	BD	BD	BD	BD	134	134	BD	BD	BD	BD	BD	BD	BD	BD
Nov 2012	BD	BD	BD	BD	BD	BD	BD	BD	132	132	BD	BD	BD	BD	BD	BD	BD	BD
Dec 2012	BD	BD	BD	BD	0.09	0.09	BD	BD	151	151	BD	BD	BD	BD	52	52	BD	BD
Jan 2013	BD	BD	BD	BD	0.08	0.08	BD	BD	122	122	BD	BD	BD	BD	BD	BD	BD	BD
Feb 2013	BD	BD	BD	BD	0.12	0.12	BD	BD	127	127	BD	BD	BD	BD	BD	BD	BD	BD
Mar 2013	BD	BD	BD	BD	0.07	0.07	BD	BD	126	126	BD	BD	BD	BD	BD	BD	BD	BD
Apr 2013	BD	BD	BD	BD	BD	BD	BD	BD	125	125	BD	BD	BD	BD	BD	BD	BD	BD
May 2013	BD	BD	BD	BD	BD	BD	BD	BD	118	118	BD	BD	BD	BD	BD	BD	BD	BD
Jun 2013	BD	BD	BD	BD	BD	BD	BD	BD	133	133	BD	BD	BD	BD	BD	BD	BD	BD
Jul 2013	BD	BD	BD	BD	BD	BD	BD	BD	135	135	BD	BD	BD	BD	BD	BD	BD	BD
Aug 2013	BD	10	BD	1	BD	0.05	BD	5	146	146	BD	1	BD	1	BD	50	BD	1
Sep 2013	BD	10	BD	1	BD	0.05	BD	5	149	149	BD	1	BD	1	BD	50	BD	1
Oct 2013	BD	10	BD	1	BD	0.05	BD	5	98.6	98.6	BD	1	BD	1	BD	50	BD	1
Nov 2013	BD	10	BD	1	BD	0.05	BD	5	106	106	BD	1	BD	1	BD	50	BD	1
Dec 2013	BD	10	BD	1	BD	0.05	BD	5	122	122	BD	1	BD	1	BD	50	BD	1

Compliance Point 003 - A

DMR	WAD Cyanide		Total Recoverable Chromium		Nitrate-Nitrogen		Total Recoverable Nickel		Total Hardness		Total Recoverable Lead		Total Recoverable Silver		Total Recoverable Zinc		Total Recoverable Cadmium	
	30-Day Avg	Daily Max	30-Day Avg	Daily Max	30-Day Avg	Daily Max	30-Day Avg	Daily Max	30-Day Avg	Daily Min	30-Day Avg	Daily Max	30-Day Avg	Daily Max	30-Day Avg	Daily Max	30-Day Avg	Daily Max
	ug/L	22 ug/L	ug/L	ug/L	mg/L	mg/L	ug/L	ug/L	mg/L	mg/L	300 ug/L	600 ug/L	ug/L	ug/L	750 ug/L	1500 ug/L	50 ug/L	100 ug/L
Jan 2014	BD	10	BD	1	BD	0.05	BD	5	128	128	BD	1	BD	1	BD	50	BD	1
Feb 2014	BD	10	BD	1	0.13	0.13	BD	5	128	128	BD	1	BD	1	BD	50	BD	1
Mar 2014	BD	10	BD	1	0.07	0.07	BD	5	97.2	97.2	BD	1	BD	1	BD	50	BD	1
Apr 2014	BD	10	BD	1	0.08	0.08	BD	5	67.2	67.2	BD	1	BD	1	BD	50	BD	1
May 2014	BD	10	BD	1	BD	0.05	BD	5	80.5	80.5	BD	1	BD	1	BD	50	BD	1
Jun 2014	BD	10	BD	1	BD	0.05	BD	5	107	107	BD	1	BD	1	BD	50	BD	1
Jul 2014	BD	10	BD	1	BD	0.05	BD	5	118	118	BD	1	BD	1	BD	50	BD	1
Aug 2014	BD	10	BD	1	BD	0.05	BD	5	125	125	BD	1	BD	1	BD	50	BD	1
Sep 2014	BD	10	BD	1	BD	0.05	BD	5	125	125	BD	1	BD	1	BD	50	BD	1
Oct 2014	BD	10	BD	1	BD	0.05	BD	5	127	127	BD	1	BD	1	BD	50	BD	1
Nov 2014	BD	10	BD	1	BD	0.05	BD	5	122	122	BD	1	BD	1	BD	50	BD	1
Dec 2014	BD	10	BD	1	0.11	0.11	BD	5	116	116	BD	1	BD	1	BD	50	BD	1
Jan 2015	BD	10	BD	1	0.18	0.18	BD	5	118	118	BD	1	BD	1	BD	50	BD	1
Feb 2015	BD	10	BD	1	0.12	0.12	BD	5	97	97	BD	1	BD	1	BD	50	BD	1
Mar 2015	BD	10	BD	1	0.17	0.17	BD	5	106	106	BD	1	BD	1	BD	50	BD	1
Apr 2015	BD	10	BD	1	0.08	0.08	BD	5	89.2	89.2	BD	1	BD	1	BD	50	BD	1
May 2015	BD	10	2	2	0.08	0.08	BD	5	74.2	74.2	BD	1	BD	1	BD	50	BD	1
Jun 2015	BD	10	BD	1	BD	0.05	BD	5	90.3	90.3	BD	1	BD	1	BD	50	BD	1
Jul 2015	BD	10	BD	1	BD	0.05	BD	5	107	107	BD	1	BD	1	BD	50	BD	1
Aug 2015	BD	10	BD	1	0.08	0.08	BD	5	120	120	BD	1	BD	1	BD	50	BD	1
Sep 2015	BD	10	BD	1	0.07	0.07	BD	5	131	131	BD	1	BD	1	BD	50	BD	1
Oct 2015	BD	10	BD	1	0.08	0.08	BD	5	125	125	BD	1	BD	1	89	89	BD	1
Nov 2015	BD	10	BD	1	0.12	0.12	BD	5	127	127	BD	1	BD	1	BD	50	BD	1
Dec 2015	BD	10	BD	1	0.17	0.17	BD	5	123	123	BD	1	BD	1	BD	50	BD	1

Compliance Point 003 - A

DMR	WAD Cyanide		Total Recoverable Chromium		Nitrate-Nitrogen		Total Recoverable Nickel		Total Hardness		Total Recoverable Lead		Total Recoverable Silver		Total Recoverable Zinc		Total Recoverable Cadmium	
	30-Day Avg	Daily Max	30-Day Avg	Daily Max	30-Day Avg	Daily Max	30-Day Avg	Daily Max	30-Day Avg	Daily Min	30-Day Avg	Daily Max	30-Day Avg	Daily Max	30-Day Avg	Daily Max	30-Day Avg	Daily Max
	ug/L	22 ug/L	ug/L	ug/L	mg/L	mg/L	ug/L	ug/L	mg/L	mg/L	300 ug/L	600 ug/L	ug/L	ug/L	750 ug/L	1500 ug/L	50 ug/L	100 ug/L
Jan 2016	BD	10	BD	1	0.18	0.18	BD	5	128	128	BD	1	BD	1	BD	50	BD	1
Feb 2016	BD	10	BD	1	0.38	0.38	BD	5	107	107	BD	1	BD	1	BD	50	BD	1
Mar 2016	BD	10	BD	1	0.29	0.29	BD	5	118	118	BD	1	BD	1	BD	50	BD	1
Apr 2016	BD	10	BD	1	0.1	0.1	BD	5	83	83	BD	1	BD	1	52	52	BD	1
May 2016	BD	10	BD	1	0.07	0.07	BD	5	94.6	94.6	BD	1	BD	1	BD	50	BD	1
Jun 2016	BD	10	BD	1	0.14	0.14	BD	5	119	119	BD	1	BD	1	BD	50	BD	1
Jul 2016	BD	10	BD	1	0.08	0.08	BD	5	124	124	BD	1	BD	1	BD	50	BD	1
Aug 2016	BD	10	BD	1	0.13	0.13	BD	5	129	129	BD	1	BD	1	BD	50	BD	1
Sep 2016	BD	10	BD	1	0.14	0.14	BD	5	125	125	BD	1	BD	1	BD	50	BD	1
Oct 2016	BD	10	BD	1	0.1	0.1	BD	5	128	128	BD	1	BD	1	BD	50	BD	1
Nov 2016	BD	10	BD	1	0.16	0.16	BD	5	131	131	BD	1	BD	1	BD	50	BD	1
Dec 2016	BD	10	BD	1	0.18	0.18	BD	5	126	126	BD	1	BD	1	BD	50	BD	1
Jan 2017	BD	10	BD	1	0.14	0.14	BD	5	126	126	BD	1	BD	1	BD	50	BD	1
Feb 2017	BD	10	BD	1	0.16	0.16	BD	5	125	125	BD	1	BD	1	BD	50	BD	1
Mar 2017	BD	10	BD	1	0.15	0.15	BD	5	122	122	BD	1	BD	1	BD	50	BD	1
Apr 2017	BD	10	BD	1	0.06	0.06	BD	5	110	110	BD	1	BD	1	BD	50	BD	1
May 2017	BD	10	BD	1	0.08	0.08	BD	5	102	102	BD	1	BD	1	BD	50	BD	1
Jun 2017	BD	10	BD	1	BD	0.05	BD	5	98.8	98.8	BD	1	BD	1	BD	50	BD	1
Jul 2017	BD	10	BD	1	BD	0.05	BD	5	120	120	BD	1	BD	1	BD	50	BD	1
Aug 2017	BD	10	BD	1	BD	0.05	BD	5	130	130	BD	1	BD	1	BD	50	BD	1
Sep 2017	BD	10	BD	1	BD	0.05	BD	5	131	131	BD	1	BD	1	BD	50	BD	1
Oct 2017	BD	10	BD	1	BD	0.05	BD	5	129	129	BD	1	BD	1	BD	50	BD	1
Nov 2017	BD	10	BD	1	0.08	0.08	BD	5	124	124	BD	1	BD	1	BD	50	BD	1
Dec 2017	BD	10	BD	1	0.1	0.1	BD	5	128	128	BD	1	BD	1	BD	50	BD	1

Compliance Point 003 - A

DMR	WAD Cyanide		Total Recoverable Chromium		Nitrate-Nitrogen		Total Recoverable Nickel		Total Hardness		Total Recoverable Lead		Total Recoverable Silver		Total Recoverable Zinc		Total Recoverable Cadmium	
	30-Day Avg	Daily Max	30-Day Avg	Daily Max	30-Day Avg	Daily Max	30-Day Avg	Daily Max	30-Day Avg	Daily Min	30-Day Avg	Daily Max	30-Day Avg	Daily Max	30-Day Avg	Daily Max	30-Day Avg	Daily Max
	ug/L	22 ug/L	ug/L	ug/L	mg/L	mg/L	ug/L	ug/L	mg/L	mg/L	300 ug/L	600 ug/L	ug/L	ug/L	750 ug/L	1500 ug/L	50 ug/L	100 ug/L
Jan 2018	BD	10	BD	1	0.14	0.14	BD	5	122	122	BD	1	BD	1	BD	50	BD	1
Feb 2018	BD	10	BD	1	0.1	0.1	BD	5	121	121	BD	1	BD	1	BD	50	BD	1
Mar 2018	BD	10	BD	1	0.17	0.17	BD	5	124	124	BD	1	BD	1	BD	50	BD	1
Apr 2018	BD	10	BD	1	0.13	0.13	BD	5	83.4	83.4	BD	1	BD	1	BD	50	BD	1
May 2018	BD	10	BD	1	BD	0.05	BD	5	78	78	BD	1	BD	1	52	52	BD	1
Jun 2018	BD	10	BD	1	BD	0.05	BD	5	99.8	99.8	BD	1	BD	1	BD	50	BD	1
Jul 2018	BD	10	BD	1	BD	0.05	BD	5	94.8	94.8	BD	1	BD	1	BD	50	BD	1
Aug 2018	BD	10	BD	1	0.05	0.05	BD	5	111	111	BD	1	BD	1	BD	50	BD	1
Sep 2018	BD	10	BD	1	BD	0.05	BD	5	121	121	BD	1	BD	1	BD	50	BD	1
Oct 2018	BD	10	BD	1	BD	0.05	BD	5	119	119	BD	1	BD	1	BD	50	BD	1
Nov 2018	BD	10	BD	1	0.1	0.1	BD	5	116	116	BD	1	BD	1	BD	50	BD	1
Dec 2018	BD	10	BD	1	0.13	0.13	BD	5	122	122	BD	1	BD	1	BD	50	BD	1
Jan 2019	BD	10	BD	1	0.17	0.17	BD	5	123	123	BD	1	BD	1	BD	50	BD	1
Feb 2019	BD	10	BD	1	0.21	0.21	BD	5	121	121	BD	1	BD	1	BD	50	BD	1
Mar 2019	BD	10	BD	1	0.19	0.19	BD	5	124	124	BD	1	BD	1	BD	50	BD	1
Apr 2019	BD	10	1	1	0.11	0.11	BD	5	66.6	66.6	BD	1	BD	1	BD	50	BD	1
May 2019	BD	10	BD	1	0.07	0.07	BD	5	75.7	75.7	BD	1	BD	1	BD	50	BD	1
Jun 2019	BD	10	BD	1	BD	0.05	BD	5	91.7	91.7	BD	1	BD	1	BD	50	BD	1
Jul 2019	BD	10	BD	1	0.06	0.06	BD	5	123	123	BD	1	BD	1	BD	50	BD	1
Aug 2019	BD	10	BD	1	0.09	0.09	BD	5	118	118	BD	1	BD	1	BD	50	BD	1
Sep 2019	BD	10	BD	1	0.11	0.11	BD	5	129	129	BD	1	BD	1	BD	50	BD	1
Oct 2019	BD	10	BD	1	0.15	0.15	BD	5	118	118	BD	1	BD	1	BD	50	BD	1
Nov 2019	BD	10	2	2	0.15	0.15	BD	5	101	101	1	1	BD	1	BD	50	BD	1
Dec 2019	WR	WR	WR	WR	WR	WR	WR	WR	WR	WR	WR	WR	WR	WR	WR	WR	WR	WR

Compliance Point 003 - A

DMR	WAD Cyanide		Total Recoverable Chromium		Nitrate-Nitrogen		Total Recoverable Nickel		Total Hardness		Total Recoverable Lead		Total Recoverable Silver		Total Recoverable Zinc		Total Recoverable Cadmium	
	30-Day Avg	Daily Max	30-Day Avg	Daily Max	30-Day Avg	Daily Max	30-Day Avg	Daily Max	30-Day Avg	Daily Min	30-Day Avg	Daily Max	30-Day Avg	Daily Max	30-Day Avg	Daily Max	30-Day Avg	Daily Max
	ug/L	22 ug/L	ug/L	ug/L	mg/L	mg/L	ug/L	ug/L	mg/L	mg/L	300 ug/L	600 ug/L	ug/L	ug/L	750 ug/L	1500 ug/L	50 ug/L	100 ug/L
Jan 2020	WR	WR	WR	WR	WR	WR	WR	WR	WR	WR	WR	WR	WR	WR	WR	WR	WR	WR
Feb 2020	WR	WR	WR	WR	WR	WR	WR	WR	WR	WR	WR	WR	WR	WR	WR	WR	WR	WR
Mar 2020	WR	WR	WR	WR	WR	WR	WR	WR	WR	WR	WR	WR	WR	WR	WR	WR	WR	WR
Apr 2020	WR	WR	WR	WR	WR	WR	WR	WR	WR	WR	WR	WR	WR	WR	WR	WR	WR	WR
May 2020	BD	10	BD	1	0.09	0.09	BD	5	80.2	80.2	BD	1	BD	1	BD	50	BD	1
Jun 2020	BD	10	1	1	0.13	0.13	BD	5	121	121	1	1	BD	1	BD	50	BD	1
Jul 2020	BD	10	BD	1	0.1	0.1	BD	5	117	117	BD	1	BD	1	BD	50	BD	1
Aug 2020	BD	10	BD	1	0.12	0.12	BD	5	126	126	BD	1	BD	1	BD	50	BD	1
Sep 2020	BD	10	BD	1	0.11	0.11	BD	5	123	123	BD	1	BD	1	BD	50	BD	1
Oct 2020	BD	10	BD	1	0.06	0.06	BD	5	127	127	BD	1	BD	1	BD	50	BD	1
Nov 2020	BD	10	BD	1	0.14	0.14	BD	5	131	131	BD	1	BD	1	BD	50	BD	1
Dec 2020	BD	10	BD	1	0.11	0.11	BD	5	123	123	BD	1	BD	1	BD	50	BD	1
Jan 2021	BD	10	BD	1	0.14	0.14	BD	5	125	125	BD	1	BD	1	BD	50	BD	1
Feb 2021	BD	10	BD	1	0.17	0.17	BD	5	119	119	BD	1	BD	1	BD	50	BD	1
Mar 2021	BD	10	BD	1	0.23	0.23	BD	5	116	116	BD	1	BD	1	BD	50	BD	1
Apr 2021	BD	10	BD	1	0.14	0.14	BD	5	86.3	86.3	BD	1	BD	1	BD	50	BD	1
May 2021	BD	10	BD	1	BD	0.05	BD	5	83.2	83.2	BD	1	BD	1	BD	50	BD	1
Jun 2021	BD	10	BD	1	0.08	0.08	BD	5	107	107	BD	1	BD	1	BD	50	BD	1
Jul 2021	BD	10	BD	1	0.07	0.07	BD	5	117	117	BD	1	BD	1	BD	50	BD	1
Aug 2021	BD	10	BD	1	BD	0.05	BD	5	133	133	BD	1	BD	1	BD	50	BD	1
Sep 2021	BD	10	BD	1	0.07	0.07	BD	5	128	128	BD	1	BD	1	BD	50	BD	1
Oct 2021	BD	10	BD	1	BD	0.05	BD	5	126	126	BD	1	BD	1	BD	50	BD	1
Nov 2021	BD	10	BD	1	BD	0.05	BD	5	125	125	BD	1	BD	1	BD	50	BD	1
Dec 2021	BD	10	BD	1	0.13	0.13	BD	5	127	127	BD	1	BD	1	BD	50	BD	1

Compliance Point 003 - A

DMR	WAD Cyanide		Total Recoverable Chromium		Nitrate-Nitrogen		Total Recoverable Nickel		Total Hardness		Total Recoverable Lead		Total Recoverable Silver		Total Recoverable Zinc		Total Recoverable Cadmium	
	30-Day Avg	Daily Max	30-Day Avg	Daily Max	30-Day Avg	Daily Max	30-Day Avg	Daily Max	30-Day Avg	Daily Min	30-Day Avg	Daily Max	30-Day Avg	Daily Max	30-Day Avg	Daily Max	30-Day Avg	Daily Max
	ug/L	22 ug/L	ug/L	ug/L	mg/L	mg/L	ug/L	ug/L	mg/L	mg/L	300 ug/L	600 ug/L	ug/L	ug/L	750 ug/L	1500 ug/L	50 ug/L	100 ug/L
Jan 2022	BD	10	BD	1	0.14	0.14	BD	5	120	120	BD	1	BD	1	BD	50	BD	1
Feb 2022	BD	10	BD	1	0.16	0.16	BD	5	124	124	BD	1	BD	1	BD	50	BD	1
Mar 2022	BD	10	BD	1	0.11	0.11	BD	5	118	118	BD	1	BD	1	BD	50	BD	1
Apr 2022	BD	10	BD	1	BD	0.05	BD	5	103	103	BD	1	BD	1	BD	50	BD	1
May 2022	BD	10	BD	1	BD	0.05	93	93	86.1	86.1	BD	1	BD	1	BD	50	BD	1
Jun 2022	BD	10	BD	1	BD	0.05	BD	5	98.5	98.5	BD	1	BD	1	BD	50	BD	1
Jul 2022	BD	10	BD	1	BD	0.05	BD	5	109	109	BD	1	BD	1	BD	50	BD	1
Aug 2022	BD	10	BD	1	BD	0.05	BD	5	124	124	BD	1	BD	1	BD	50	BD	1
Sep 2022	BD	10	BD	1	BD	0.05	BD	5	125	125	BD	1	BD	1	BD	50	BD	1
Oct 2022	BD	10	BD	1	BD	0.05	BD	5	135	135	BD	1	BD	1	BD	50	BD	1
Nov 2022	BD	10	BD	1	0.08	0.08	BD	5	127	127	BD	1	BD	1	BD	50	BD	1
Dec 2022	EC	EC	EC	EC	EC	EC	EC	EC	EC	EC	EC	EC	EC	EC	EC	EC	EC	EC

Compliance Point 003 - A

DMR	Total Recoverable Selenium		Total Recoverable Mercury		Total Recoverable Arsenic		Total Recoverable Iron		Total Sulfate		Total Sodium		Total Recoverable Aluminum		TDS	
	30-Day Avg	Daily Max	30-Day Avg	Daily Max	30-Day Avg	Daily Max	30-Day Avg	Daily Max	30-Day Avg	Daily Max	30-Day Avg	Daily Max	30-Day Avg	Daily Max	30-Day Avg	Daily Max
	4.6 ug/L	ug/L	1 ug/L	2 ug/L	ug/L	ug/L	ug/L	ug/L	mg/L	mg/L	mg/L	mg/L	ug/L	ug/L	mg/L	mg/L
Jul 2005	0	5	0	0.2	0	5	53	53	94.6	94.6	12.4	12.4	61	61	302	302
Aug 2005	0	5	0	0.2	0	5	380	380	63.6	63.6	9.23	9.23	377	377	210	210
Sep 2005	0	5	0	0.2	0	5	199	199	61.3	61.3	8.15	8.15	216	216	205	205

Compliance Point 003 - A

DMR	Total Recoverable Selenium		Total Recoverable Mercury		Total Recoverable Arsenic		Total Recoverable Iron		Total Sulfate		Total Sodium		Total Recoverable Aluminum		TDS	
	30-Day Avg	Daily Max	30-Day Avg	Daily Max	30-Day Avg	Daily Max	30-Day Avg	Daily Max	30-Day Avg	Daily Max	30-Day Avg	Daily Max	30-Day Avg	Daily Max	30-Day Avg	Daily Max
	4.6 ug/L	ug/L	1 ug/L	2 ug/L	ug/L	ug/L	ug/L	ug/L	mg/L	mg/L	mg/L	mg/L	ug/L	ug/L	mg/L	mg/L
Oct 2005	BD	BD	BD	BD	BD	BD	BD	BD	64	64	7.51	7.51	32	32	206	206
Nov 2005	BD	BD	0.2	0.2	5	5	50	50	50.7	50.7	6.53	6.53	36	36	166	166
Dec 2005	BD	BD	0.2	0.2	5	5	69	69	50.1	50.1	6.23	6.23	89	89	166	166
Jan 2006	BD	BD	0.2	0.2	5	5	50	50	50.2	50.2	5.84	5.84	43	43	159	159
Feb 2006	BD	BD	0.2	0.2	5	5	50	50	46.7	46.7	5.74	5.74	28	28	165	165
Mar 2006	BD	BD	0.2	0.2	7	7	50	50	47.5	47.5	5.51	5.51	36	36	168	168
Apr 2006	BD	BD	0.2	0.2	5	5	201	201	62.7	62.7	12.2	12.2	395	395	154	154
May 2006	BD	BD	0.2	0.2	5	5	50	50	69.9	69.9	11.6	11.6	50	50	179	179
Jun 2006	BD	5	0.2	0.2	5	5	50	50	68.9	68.9	10.5	10.5	25	25	182	182
Jul 2006	BD	5	0.2	0.2	5	5	50	50	50.5	50.5	7.9	7.9	28	28	184	184
Aug 2006	BD	BD	BD	BD	5	5	50	50	45	45	6.13	6.13	47	47	185	185
Sep 2006	BD	BD	BD	BD	5	5	50	50	40.6	40.6	5.5	5.5	38	38	182	182
Oct 2006	BD	BD	BD	BD	5	5	50	50	92.9	92.9	13.9	13.9	20	20	208	208
Nov 2006	BD	BD	BD	BD	5	5	50	50	89	89	13.2	13.2	45	45	206	206
Dec 2006	BD	BD	BD	BD	5	5	50	50	89.1	89.1	10.7	10.7	25	25	195	195
Jan 2007	BD	BD	BD	BD	5	5	50	50	64.3	64.3	8.45	8.45	34	34	183	183
Feb 2007	BD	BD	BD	BD	5	5	50	50	55.9	55.9	7.18	7.18	475	475	126	126
Mar 2007	BD	BD	0.2	0.2	5	5	50	50	74.7	74.7	8.62	8.62	28	28	190	190
Apr 2007	BD	BD	BD	BD	5	5	246	246	54.1	54.1	10	10	450	450	132	132
May 2007	BD	BD	BD	BD	5	5	50	50	54.2	54.2	10.3	10.3	86	86	159	159
Jun 2007	BD	BD	BD	BD	5	5	50	50	85.8	85.8	11.4	11.4	36	36	192	192
Jul 2007	BD	BD	BD	BD	5	5	56	56	53	53	8.17	8.17	51	51	192	192
Aug 2007	BD	BD	BD	BD	5	5	55	55	45.9	45.9	6.65	6.65	66	66	170	170
Sep 2007	BD	BD	BD	BD	5	5	50	50	64.6	64.6	6.56	6.56	50	50	208	208

Compliance Point 003 - A

DMR	Total Recoverable Selenium		Total Recoverable Mercury		Total Recoverable Arsenic		Total Recoverable Iron		Total Sulfate		Total Sodium		Total Recoverable Aluminum		TDS	
	30-Day Avg	Daily Max	30-Day Avg	Daily Max	30-Day Avg	Daily Max	30-Day Avg	Daily Max	30-Day Avg	Daily Max	30-Day Avg	Daily Max	30-Day Avg	Daily Max	30-Day Avg	Daily Max
	4.6 ug/L	ug/L	1 ug/L	2 ug/L	ug/L	ug/L	ug/L	ug/L	mg/L	mg/L	mg/L	mg/L	ug/L	ug/L	mg/L	mg/L
Oct 2007	BD	BD	BD	BD	5	5	50	50	46.8	46.8	5.36	5.36	35	35	193	193
Nov 2007	BD	BD	BD	BD	5	5	50	50	45.9	45.9	5.4	5.4	42	42	176	176
Dec 2007	BD	BD	BD	BD	5	5	50	50	39.9	39.9	5.75	5.75	43	43	168	168
Jan 2008	BD	BD	BD	BD	5	5	50	50	30.1	30.1	5.75	5.75	53	53	185	185
Feb 2008	BD	BD	BD	BD	5	5	50	50	34	34	5	5	54	54	171	171
Mar 2008	BD	BD	0.2	0.2	5	5	50	50	29.4	29.4	5.8	5.8	31	31	158	158
Apr 2008	BD	BD	BD	BD	5	5	98	98	150	150	12.2	12.2	139	139	246	246
May 2008	BD	BD	0.2	0.2	5	5	222	222	44.4	44.4	7	7	315	315	121	121
Jun 2008	BD	BD	BD	BD	5	5	50	50	71	71	7.71	7.71	46.7	46.7	173	173
Jul 2008	BD	BD	BD	BD	5	5	50	50	47.3	47.3	5.95	5.95	41	41	174	174
Aug 2008	BD	BD	BD	BD	5	5	79	79	51.3	51.3	5.57	5.57	93	93	259	259
Sep 2008	BD	BD	BD	BD	5	5	92	92	51.9	51.9	7.2	7.2	96	96	197	197
Oct 2008	BD	BD	BD	BD	5	5	104	104	48.3	48.3	4.28	4.28	115	115	159	159
Nov 2008	BD	BD	BD	BD	5	5	184	184	27.1	27.1	4.75	4.75	255	255	126	126
Dec 2008	BD	BD	BD	BD	5	5	93	93	82.8	82.8	8.95	8.95	105	105	221	221
Jan 2009	0	BD	BD	BD	5	5	64	64	57.6	57.6	5.82	5.82	80	80	171	171
Feb 2009	0	BD	BD	BD	BD	BD	66	66	55.1	55.1	5.51	5.51	98	98	173	173
Mar 2009	0	BD	BD	BD	BD	BD	63	63	75.7	75.7	6.15	6.15	84	84	169	169
Apr 2009	0	BD	BD	BD	BD	BD	362	362	45	45	7.35	7.35	613	613	119	119
May 2009	0	BD	BD	BD	BD	BD	192	192	32.4	32.4	6.08	6.08	329	329	96	96
Jun 2009	0	BD	BD	BD	BD	BD	127	127	38	38	5.79	5.79	182	182	137	137
Jul 2009	0	BD	BD	BD	BD	BD	132	132	22.2	22.2	5.61	5.61	163	163	166	166
Aug 2009	0	BD	BD	BD	BD	BD	166	166	18.8	18.8	4.61	4.61	181	181	135	135
Sep 2009	0	BD	BD	BD	BD	BD	186	186	39.6	39.6	4.14	4.14	202	202	187	187

Compliance Point 003 - A

DMR	Total Recoverable Selenium		Total Recoverable Mercury		Total Recoverable Arsenic		Total Recoverable Iron		Total Sulfate		Total Sodium		Total Recoverable Aluminum		TDS	
	30-Day Avg	Daily Max	30-Day Avg	Daily Max	30-Day Avg	Daily Max	30-Day Avg	Daily Max	30-Day Avg	Daily Max	30-Day Avg	Daily Max	30-Day Avg	Daily Max	30-Day Avg	Daily Max
	4.6 ug/L	ug/L	1 ug/L	2 ug/L	ug/L	ug/L	ug/L	ug/L	mg/L	mg/L	mg/L	mg/L	ug/L	ug/L	mg/L	mg/L
Oct 2009	0	BD	BD	BD	BD	BD	129	129	38.6	38.6	3.98	3.98	150	150	139	139
Nov 2009	0	BD	BD	BD	BD	BD	107	107	109	109	9.31	9.31	134	134	229	229
Dec 2009	0	BD	BD	BD	BD	BD	212	212	69.2	69.2	6.81	6.81	170	170	154	154
Jan 2010	0	BD	BD	BD	BD	BD	153	153	49.7	49.7	5.19	5.19	174	174	194	194
Feb 2010	0	BD	BD	BD	BD	BD	BD	BD	41.7	41.7	5.3	5.3	52	52	194	194
Mar 2010	0	BD	BD	BD	BD	BD	109	109	34.3	34.3	4.36	4.36	115	115	149	149
Apr 2010	0	BD	BD	BD	5	5	668	668	42.4	42.4	7.66	7.66	1,100	1,100	126	126
May 2010	0	BD	BD	BD	BD	BD	137	137	50	50	7.84	7.84	217	217	130	130
Jun 2010	0	BD	BD	BD	BD	BD	77	77	41.9	41.9	6.95	6.95	110	110	128	128
Jul 2010	0	BD	BD	BD	BD	BD	92	92	40.3	40.3	6.06	6.06	119	119	138	138
Aug 2010	0	BD	BD	BD	BD	BD	126	126	48.7	48.7	5.78	5.78	155	155	181	181
Sep 2010	ND	ND	ND	ND	ND	ND	ND	ND	ND	ND	ND	ND	ND	ND	ND	ND
Oct 2010	0	5	0.2	0.2	5	5	158	158	61.7	61.7	10.4	10.4	177	177	178	178
Nov 2010	0	BD	BD	BD	BD	BD	159	159	58.9	58.9	5.7	5.7	146	146	163	163
Dec 2010	0	BD	BD	BD	BD	BD	111	111	44.8	44.8	5.27	5.27	138	138	134	134
Jan 2011	0	BD	BD	BD	BD	BD	88	88	41.5	41.5	4.91	4.91	99	99	140	140
Feb 2011	0	BD	BD	BD	BD	BD	65	65	43.7	43.7	4.92	4.92	71	71	157	157
Mar 2011	0	BD	BD	BD	BD	BD	383	383	35.1	35.1	4.19	4.19	623	623	136	136
Apr 2011	0	BD	BD	BD	BD	BD	184	184	59.9	59.9	8.94	8.94	264	264	143	143
May 2011	0	BD	BD	BD	BD	BD	356	356	31.5	31.5	6.45	6.45	509	509	124	124
Jun 2011	0	BD	BD	BD	5	5	111	111	42.8	42.8	6.8	6.8	149	149	129	129
Jul 2011	0	BD	BD	BD	BD	BD	111	111	35.9	35.9	5.2	5.2	135	135	127	127
Aug 2011	0	BD	BD	BD	5	5	106	106	33.2	33.2	5.1	5.1	128	128	165	165
Sep 2011	0	BD	BD	BD	BD	BD	158	158	32.8	32.8	4.33	4.33	174	174	156	156

Compliance Point 003 - A

DMR	Total Recoverable Selenium		Total Recoverable Mercury		Total Recoverable Arsenic		Total Recoverable Iron		Total Sulfate		Total Sodium		Total Recoverable Aluminum		TDS	
	30-Day Avg	Daily Max	30-Day Avg	Daily Max	30-Day Avg	Daily Max	30-Day Avg	Daily Max	30-Day Avg	Daily Max	30-Day Avg	Daily Max	30-Day Avg	Daily Max	30-Day Avg	Daily Max
	4.6 ug/L	ug/L	1 ug/L	2 ug/L	ug/L	ug/L	ug/L	ug/L	mg/L	mg/L	mg/L	mg/L	ug/L	ug/L	mg/L	mg/L
Oct 2011	0	BD	BD	BD	BD	BD	66	66	30.7	30.7	3.81	3.81	78	78	166	166
Nov 2011	0	BD	BD	BD	BD	BD	94	94	32.3	32.3	3.62	3.62	100	100	167	167
Dec 2011	0	BD	BD	BD	BD	BD	93	93	32	32	6.13	6.13	113	113	157	157
Jan 2012	0	BD	BD	BD	BD	BD	89	89	31.5	31.5	3.13	3.13	96	96	151	151
Feb 2012	0	BD	BD	BD	BD	BD	73	73	32.1	32.1	3.79	3.79	88	88	157	157
Mar 2012	0	BD	BD	BD	BD	BD	92	92	24.5	24.5	3.13	3.13	120	120	154	154
Apr 2012	0	BD	BD	BD	BD	BD	72	72	63.4	63.4	8.01	8.01	114	114	168	168
May 2012	0	BD	BD	BD	BD	BD	69	69	66.7	66.7	8.6	8.6	102	102	161	161
Jun 2012	0	BD	BD	BD	BD	BD	BD	BD	52.7	52.7	6.67	6.67	60	60	162	162
Jul 2012	0	BD	BD	BD	BD	BD	52	52	43.6	43.6	5.64	5.64	53	53	161	161
Aug 2012	0	BD	BD	BD	BD	BD	BD	BD	37.5	37.5	5.21	5.21	43	43	176	176
Sep 2012	0	BD	BD	BD	BD	BD	BD	BD	37.2	37.2	5	5	59	59	167	167
Oct 2012	0	BD	BD	BD	BD	BD	BD	BD	37.3	37.3	4.85	4.85	40	40	130	130
Nov 2012	0	BD	BD	BD	BD	BD	BD	BD	36.9	36.9	3.69	3.69	26	26	173	173
Dec 2012	0	BD	BD	BD	BD	BD	52	52	36.7	36.7	3.68	3.68	55	55	147	147
Jan 2013	0	BD	BD	BD	BD	BD	BD	BD	35.4	35.4	3.37	3.37	19	19	155	155
Feb 2013	0	BD	BD	BD	BD	BD	BD	BD	32.3	32.3	3.47	3.47	17	17	145	145
Mar 2013	0	BD	BD	BD	BD	BD	BD	BD	36.2	36.2	3.15	3.15	16	16	145	145
Apr 2013	0	BD	BD	BD	BD	BD	BD	BD	85	85	8.53	8.53	44	44	166	166
May 2013	0	BD	BD	BD	BD	BD	BD	BD	84.2	84.2	8.1	8.1	52	52	166	166
Jun 2013	BD	BD	BD	BD	BD	BD	BD	BD	80.8	80.8	8.68	8.68	34	34	192	192
Jul 2013	0	BD	BD	BD	BD	BD	BD	BD	68.8	68.8	6.5	6.5	35	35	172	172
Aug 2013	0	5	BD	0.2	BD	5	BD	50	52.5	52.5	5.52	5.52	54	54	187	187
Sep 2013	0	5	BD	0.2	BD	5	BD	50	60	60	5.33	5.33	40	40	208	208

Compliance Point 003 - A

DMR	Total Recoverable Selenium		Total Recoverable Mercury		Total Recoverable Arsenic		Total Recoverable Iron		Total Sulfate		Total Sodium		Total Recoverable Aluminum		TDS	
	30-Day Avg	Daily Max	30-Day Avg	Daily Max	30-Day Avg	Daily Max	30-Day Avg	Daily Max	30-Day Avg	Daily Max	30-Day Avg	Daily Max	30-Day Avg	Daily Max	30-Day Avg	Daily Max
	4.6 ug/L	ug/L	1 ug/L	2 ug/L	ug/L	ug/L	ug/L	ug/L	mg/L	mg/L	mg/L	mg/L	ug/L	ug/L	mg/L	mg/L
Oct 2013	0	5	BD	0.2	BD	5	292	292	46.8	46.8	6.39	6.39	534	534	90	90
Nov 2013	0	5	BD	0.2	BD	5	58	58	61.4	61.4	6.95	6.95	70	70	105	105
Dec 2013	0	5	BD	0.2	BD	5	BD	50	49.5	49.5	4.74	4.74	44	44	151	151
Jan 2014	0	5	BD	0.2	BD	5	90	90	42.5	42.5	4.16	4.16	88	88	130	130
Feb 2014	0	5	BD	0.2	BD	5	89	89	37.6	37.6	4.05	4.05	95	95	138	138
Mar 2014	0	5	BD	0.2	BD	5	184	184	24.2	24.2	3.68	3.68	234	234	110	110
Apr 2014	0	5	BD	0.2	BD	5	450	450	36.4	36.4	6.58	6.58	829	829	118	118
May 2014	0	5	BD	0.2	9	9	75	75	30.4	30.4	5.28	5.28	133	133	119	119
Jun 2014	0	5	BD	0.2	BD	5	56	56	30.1	30.1	4.64	4.64	82	82	106	106
Jul 2014	0	5	BD	0.2	BD	5	BD	50	45.7	45.7	4.85	4.85	66	66	142	142
Aug 2014	0	5	BD	0.2	BD	5	126	126	35.8	35.8	4.62	4.62	143	143	171	171
Sep 2014	0	5	BD	0.2	BD	5	110	110	32.5	32.5	3.91	3.91	125	125	160	160
Oct 2014	0	5	BD	0.2	BD	5	BD	50	63.1	63.1	5.1	5.1	52	52	168	168
Nov 2014	0	5	BD	0.2	BD	5	105	105	NR	NR	NR	NR	120	120	122	122
Dec 2014	0	5	BD	0.2	BD	5	112	112	NR	NR	NR	NR	133	133	144	144
Jan 2015	0	5	BD	0.2	BD	5	74	74	47.2	47.2	4.36	4.36	77	77	145	145
Feb 2015	0	5	BD	0.2	BD	5	496	496	NR	NR	NR	NR	842	842	127	127
Mar 2015	0	5	BD	0.2	BD	5	233	233	NR	NR	NR	NR	404	404	132	132
Apr 2015	0	5	BD	0.2	BD	5	160	160	38.8	38.8	5.77	5.77	303	303	127	127
May 2015	0	5	BD	0.2	6	6	704	704	NR	NR	NR	NR	1,190	1,190	116	116
Jun 2015	0	5	BD	0.2	BD	5	212	212	NR	NR	NR	NR	324	324	115	115
Jul 2015	0	5	BD	0.2	5	5	121	121	42.3	42.3	6.12	6.12	201	201	139	139
Aug 2015	0	5	BD	0.2	BD	5	234	234	NR	NR	NR	NR	291	291	141	141
Sep 2015	0	5	BD	0.2	BD	5	165	165	NR	NR	NR	NR	209	209	156	156

Compliance Point 003 - A

DMR	Total Recoverable Selenium		Total Recoverable Mercury		Total Recoverable Arsenic		Total Recoverable Iron		Total Sulfate		Total Sodium		Total Recoverable Aluminum		TDS	
	30-Day Avg	Daily Max	30-Day Avg	Daily Max	30-Day Avg	Daily Max	30-Day Avg	Daily Max	30-Day Avg	Daily Max	30-Day Avg	Daily Max	30-Day Avg	Daily Max	30-Day Avg	Daily Max
	4.6 ug/L	ug/L	1 ug/L	2 ug/L	ug/L	ug/L	ug/L	ug/L	mg/L	mg/L	mg/L	mg/L	ug/L	ug/L	mg/L	mg/L
Oct 2015	0	5	BD	0.2	BD	5	51	51	32.6	32.6	4.77	4.77	74	74	155	155
Nov 2015	0	5	BD	0.2	BD	5	142	142	NR	NR	NR	NR	183	183	142	142
Dec 2015	0	5	BD	0.2	BD	5	175	175	NR	NR	NR	NR	211	211	144	144
Jan 2016	0	5	BD	0.2	BD	5	82	82	30.1	30.1	3.32	3.32	111	111	143	143
Feb 2016	0	5	BD	0.2	5	5	231	231	NR	NR	NR	NR	377	377	137	137
Mar 2016	0	5	BD	0.2	BD	5	273	273	NR	NR	NR	NR	410	410	152	152
Apr 2016	0	5	BD	0.2	BD	5	277	277	47	47	7.08	7.08	522	522	121	121
May 2016	0	5	BD	0.2	BD	5	93	93	NR	NR	NR	NR	160	160	135	135
Jun 2016	0	5	BD	0.2	BD	5	BD	50	NR	NR	NR	NR	91	91	148	148
Jul 2016	0	5	BD	0.2	BD	5	BD	50	31.1	31.1	4.6	4.6	78	78	142	142
Aug 2016	0	5	BD	0.2	BD	5	54	54	NR	NR	NR	NR	92	92	143	143
Sep 2016	0	5	BD	0.2	BD	5	111	111	NR	NR	NR	NR	132	132	135	135
Oct 2016	0	5	BD	0.2	BD	5	BD	50	28.8	28.8	4.16	4.16	69	69	161	161
Nov 2016	0	5	BD	0.2	BD	5	BD	50	NR	NR	NR	NR	59	59	153	153
Dec 2016	0	5	BD	0.2	BD	5	BD	50	NR	NR	NR	NR	45	45	148	148
Jan 2017	0	5	BD	0.2	BD	5	BD	50	30.3	30.3	3.02	3.02	33	33	161	161
Feb 2017	0	5	BD	0.2	BD	5	BD	50	NR	NR	NR	NR	38	38	136	136
Mar 2017	0	5	BD	0.2	BD	5	50	50	NR	NR	NR	NR	59	59	149	149
Apr 2017	0	5	BD	0.2	BD	5	64	64	68.4	68.4	6.27	6.27	103	103	157	157
May 2017	0	5	BD	0.2	BD	5	133	133	NR	NR	NR	NR	215	215	142	142
Jun 2017	0	5	BD	0.2	BD	5	BD	50	NR	NR	NR	NR	179	179	95	95
Jul 2017	0	5	BD	0.2	BD	5	52	52	45.5	45.5	6.28	6.28	83	83	157	157
Aug 2017	0	5	BD	0.2	7	7	74	74	NR	NR	NR	NR	100	100	144	144
Sep 2017	0	5	BD	0.2	BD	5	BD	50	NR	NR	NR	NR	73	73	157	157

Compliance Point 003 - A

DMR	Total Recoverable Selenium		Total Recoverable Mercury		Total Recoverable Arsenic		Total Recoverable Iron		Total Sulfate		Total Sodium		Total Recoverable Aluminum		TDS	
	30-Day Avg	Daily Max	30-Day Avg	Daily Max	30-Day Avg	Daily Max	30-Day Avg	Daily Max	30-Day Avg	Daily Max	30-Day Avg	Daily Max	30-Day Avg	Daily Max	30-Day Avg	Daily Max
	4.6 ug/L	ug/L	1 ug/L	2 ug/L	ug/L	ug/L	ug/L	ug/L	mg/L	mg/L	mg/L	mg/L	ug/L	ug/L	mg/L	mg/L
Oct 2017	0	5	BD	0.2	BD	5	94	94	34.1	34.1	4.54	4.54	106	106	172	172
Nov 2017	0	5	BD	0.2	BD	5	67	67	NR	NR	NR	NR	73	73	142	142
Dec 2017	0	5	BD	0.2	BD	5	64	64	NR	NR	NR	NR	73	73	132	132
Jan 2018	0	5	BD	0.2	BD	5	58	58	34.9	34.9	3.61	3.61	67	67	86	86
Feb 2018	0	5	BD	0.2	BD	5	59	59	NR	NR	NR	NR	67	67	117	117
Mar 2018	0	5	BD	0.2	BD	5	BD	50	NR	NR	NR	NR	22	22	147	147
Apr 2018	0	5	BD	0.2	5	5	382	382	63.5	63.5	8.1	8.1	750	750	137	137
May 2018	0	5	BD	0.2	6	6	111	111	NR	NR	NR	NR	162	162	110	110
Jun 2018	0	5	BD	0.2	BD	5	51	51	NR	NR	NR	NR	95	95	134	134
Jul 2018	0	5	BD	0.2	BD	5	199	199	49.1	49.1	7.73	7.73	370	370	139	139
Aug 2018	0	5	BD	0.2	BD	5	199	199	NR	NR	NR	NR	204	204	150	150
Sep 2018	0	5	BD	0.2	BD	5	140	140	NR	NR	NR	NR	169	169	162	162
Oct 2018	0	5	BD	0.2	BD	5	133	133	36.3	36.3	5.61	5.61	180	180	149	149
Nov 2018	0	5	BD	0.2	BD	5	127	127	NR	NR	NR	NR	150	150	135	135
Dec 2018	0	5	BD	0.2	BD	5	84	84	NR	NR	NR	NR	90	90	118	118
Jan 2019	0	5	BD	0.2	BD	5	61	61	43.2	43.2	4.78	4.78	84	84	137	137
Feb 2019	0	5	BD	0.2	BD	5	BD	50	NR	NR	NR	NR	67	67	154	154
Mar 2019	0	5	BD	0.2	BD	5	BD	50	NR	NR	NR	NR	60	60	156	156
Apr 2019	0	5	BD	0.2	6	6	707	707	36.1	36.1	6.15	6.15	1,030	1,030	70	70
May 2019	0	5	BD	0.2	BD	5	148	148	NR	NR	NR	NR	236	236	116	116
Jun 2019	0	5	BD	0.2	BD	5	62	62	NR	NR	NR	NR	123	123	137	137
Jul 2019	0	5	BD	0.2	BD	5	121	121	54.9	54.9	6.36	6.36	147	147	171	171
Aug 2019	0	5	BD	0.2	BD	5	209	209	NR	NR	NR	NR	240	240	160	160
Sep 2019	0	5	BD	0.2	BD	5	149	149	NR	NR	NR	NR	182	182	158	158

Compliance Point 003 - A

DMR	Total Recoverable Selenium		Total Recoverable Mercury		Total Recoverable Arsenic		Total Recoverable Iron		Total Sulfate		Total Sodium		Total Recoverable Aluminum		TDS	
	30-Day Avg	Daily Max	30-Day Avg	Daily Max	30-Day Avg	Daily Max	30-Day Avg	Daily Max	30-Day Avg	Daily Max	30-Day Avg	Daily Max	30-Day Avg	Daily Max	30-Day Avg	Daily Max
	4.6 ug/L	ug/L	1 ug/L	2 ug/L	ug/L	ug/L	ug/L	ug/L	mg/L	mg/L	mg/L	mg/L	ug/L	ug/L	mg/L	mg/L
Oct 2019	0	5	BD	0.2	BD	5	157	157	37.4	37.4	4.58	4.58	212	212	146	146
Nov 2019	0	5	BD	0.2	6	6	1,010	1,010	NR	NR	NR	NR	1,510	1,510	159	159
Dec 2019	WR	WR	WR	WR	WR	WR	WR	WR	WR	WR	WR	WR	WR	WR	WR	WR
Jan 2020	WR	WR	WR	WR	WR	WR	WR	WR	NR	NR	NR	NR	WR	WR	WR	WR
Feb 2020	WR	WR	WR	WR	WR	WR	WR	WR	NR	NR	NR	NR	WR	WR	WR	WR
Mar 2020	WR	WR	WR	WR	WR	WR	WR	WR	WR	WR	WR	WR	WR	WR	WR	WR
Apr 2020	WR	WR	WR	WR	WR	WR	WR	WR	WR	WR	WR	WR	WR	WR	WR	WR
May 2020	0	5	BD	0.2	BD	5	266	266	35.6	35.6	5.79	5.79	454	454	70	70
Jun 2020	0	5	BD	0.2	5	5	503	503	NR	NR	NR	NR	545	545	143	143
Jul 2020	0	5	BD	0.2	6	6	295	295	30.2	30.2	3.83	3.83	334	334	146	146
Aug 2020	0	5	BD	0.2	BD	5	187	187	NR	NR	NR	NR	211	211	116	116
Sep 2020	0	5	BD	0.2	BD	5	271	271	NR	NR	NR	NR	354	354	122	122
Oct 2020	0	5	BD	0.2	BD	5	137	137	31	31	3.45	3.45	164	164	147	147
Nov 2020	0	5	BD	0.2	BD	5	106	106	NR	NR	NR	NR	121	121	115	115
Dec 2020	0	5	BD	0.2	BD	5	83	83	NR	NR	NR	NR	86	86	124	124
Jan 2021	0	5	BD	0.2	BD	5	138	138	32.8	32.8	3.08	3.08	166	166	140	140
Feb 2021	0	5	BD	0.2	BD	5	51	51	NR	NR	NR	NR	62	62	125	125
Mar 2021	0	5	BD	0.2	BD	5	72	72	NR	NR	NR	NR	75	75	137	137
Apr 2021	0	5	BD	0.2	BD	5	345	345	55.8	55.8	5.96	5.96	516	516	130	130
May 2021	0	5	BD	0.2	BD	5	120	120	NR	NR	NR	NR	173	173	127	127
Jun 2021	0	5	BD	0.2	BD	5	124	124	NR	NR	NR	NR	153	153	126	126
Jul 2021	0	5	BD	0.2	BD	5	BD	50	40.6	40.6	6.11	6.11	67	67	151	151
Aug 2021	0	5	BD	0.2	BD	5	85	85	NR	NR	NR	NR	88	88	133	133
Sep 2021	0	5	BD	0.2	BD	5	BD	50	NR	NR	NR	NR	64	64	149	149

Compliance Point 003 - A

DMR	Total Recoverable Selenium		Total Recoverable Mercury		Total Recoverable Arsenic		Total Recoverable Iron		Total Sulfate		Total Sodium		Total Recoverable Aluminum		TDS	
	30-Day Avg	Daily Max	30-Day Avg	Daily Max	30-Day Avg	Daily Max	30-Day Avg	Daily Max	30-Day Avg	Daily Max	30-Day Avg	Daily Max	30-Day Avg	Daily Max	30-Day Avg	Daily Max
	4.6 ug/L	ug/L	1 ug/L	2 ug/L	ug/L	ug/L	ug/L	ug/L	mg/L	mg/L	mg/L	mg/L	ug/L	ug/L	mg/L	mg/L
Oct 2021	0	5	BD	0.2	BD	5	151	151	34.7	34.7	4.94	4.94	144	144	159	159
Nov 2021	0	5	BD	0.2	BD	5	BD	50	NR	NR	NR	NR	61	61	153	153
Dec 2021	0	5	BD	0.2	BD	5	BD	50	NR	NR	NR	NR	39	39	139	139
Jan 2022	0	5	BD	0.2	BD	5	BD	50	40.3	40.3	4.87	4.87	66	66	128	128
Feb 2022	0	5	BD	0.2	BD	5	BD	50	NR	NR	NR	NR	47	47	128	128
Mar 2022	0	5	BD	0.2	BD	5	BD	50	NR	NR	NR	NR	45	45	116	116
Apr 2022	0	5	BD	0.2	BD	5	BD	50	67.2	67.2	6.5	6.5	48	48	142	142
May 2022	0	5	BD	0.2	BD	5	BD	50	NR	NR	NR	NR	100	100	150	150
Jun 2022	0	5	BD	0.2	BD	5	BD	50	NR	NR	NR	NR	71	71	89	89
Jul 2022	0	5	BD	0.2	BD	5	BD	50	37.3	37.3	5.92	5.92	57	57	123	123
Aug 2022	0	5	BD	0.2	BD	5	62	62	NR	NR	NR	NR	79	79	141	141
Sep 2022	BD	BD	BD	0.2	BD	5	70	70	NR	NR	NR	NR	84	84	130	130
Oct 2022	BD	BD	BD	0.2	BD	5	149	149	31	31	4.15	4.15	173	173	133	133
Nov 2022	BD	BD	BD	0.2	BD	5	54	54	30.1	30.1	3.8	3.8	69	69	124	124
Dec 2022	EC	EC	EC	EC	EC	EC	EC	EC	EC	EC	EC	EC	EC	EC	EC	EC

Compliance Point 003 - W

DMR	Acute Ceriodaphnia	Acute Pimephales Promelas
	Daily Max	Daily Max
	pass=0;fail=1	pass=0;fail=1
Sep 2005	0	NR
Dec 2005	NR	0
Mar 2006	0	NR
Jun 2006	NR	0
Sep 2006	0	NR
Dec 2006	NR	0
Mar 2007	0	NR
Jun 2007	NR	0
Sep 2007	0	NR
Dec 2007	NR	0
Mar 2008	0	0
Jun 2008	NR	0
Sep 2008	0	NR
Dec 2008	NR	0
Mar 2009	0	NR
Jun 2009	NR	0
Sep 2009	0	NR
Dec 2009	NR	0
Mar 2010	0	NR
Jun 2010	NR	0
Sep 2010	ND	ND
Dec 2010	NR	0
Mar 2011	0	0

DMR	Acute Ceriodaphnia	Acute Pimephales Promelas
	Daily Max	Daily Max
	pass=0;fail=1	pass=0;fail=1
Jun 2011	NR	0
Sep 2011	0	NR
Dec 2011	NR	0
Mar 2012	0	0
Jun 2012	NR	0
Sep 2012	0	NR
Dec 2012	NR	0
Mar 2013	0	NR
Jun 2013	NR	0
Sep 2013	0	NR
Dec 2013	NR	0
Mar 2014	0	NR
Jun 2014	NR	0
Sep 2014	0	NR
Dec 2014	NR	0
Mar 2015	0	NR
Jun 2015	NR	0
Sep 2015	0	NR
Dec 2015	NR	0
Mar 2016	0	NR
Jun 2016	NR	0
Sep 2016	0	NR
Dec 2016	NR	0

DMR	Acute Ceriodaphnia	Acute Pimephales Promelas
	Daily Max	Daily Max
	pass=0;fail=1	pass=0;fail=1
Mar 2017	0	NR
Jun 2017	NR	0
Sep 2017	0	NR
Dec 2017	NR	0
Mar 2018	0	NR
Jun 2018	NR	0
Sep 2018	0	NR
Dec 2018	NR	0
Mar 2019	0	NR
Jun 2019	NR	0
Sep 2019	0	NR
Dec 2019	NR	WR
Mar 2020	WR	NR
Jun 2020	NR	0
Sep 2020	0	NR
Dec 2020	NR	0
Mar 2021	0	NR
Jun 2021	NR	0
Sep 2021	0	NR
Dec 2021	NR	0
Mar 2022	0	NR
Jun 2022	NR	0
Sep 2022	0	NR
Dec 2022	NR	EC

Compliance Point 004 - A

DMR	Flow rate		Water Temperature		pH		BOD5		TSS		Ammonia-Nitrogen		Oil and grease visual	Oxygen, dissolved [DO]	TPH	Total Recoverable Copper	
	Daily Min	Daily Max	30-Day Avg	Daily Max	Daily Min	Daily Max	30-Day Avg	Daily Max	30-Day Avg	Daily Max	30-Day Avg	Daily Max	Daily Max	Daily Min	Daily Max	30-Day Avg	Daily Max
	MGD	MGD	deg C	23.9 deg C	6.5 SU	8.8 SU	mg/L	mg/L	90 mg/L	158 mg/L	mg/L	mg/L	N=0;Y=1	mg/L	10 mg/L	ug/L	ug/L
Jul 2005	0.22	0.4	18.38	20.6	6.55	6.82	7	7	12	24	0.78	1.56	0	NR	NR	3	6
Aug 2005	0.25	0.28	19	21.1	6.55	6.83	0	3	6.5	13	4.18	5.36	0	NR	NR	2.5	5
Sep 2005	0.23	0.3	15.48	17.7	6.54	6.73	9.2	9.2	10	10	3.17	3.41	0	NR	NR	4	7
Oct 2005	0.2	0.28	7.58	10.2	6.57	6.83	5.8	5.8	10	10	2.73	2.73	0	NR	NR	6	6
Nov 2005	0	0.2	3.25	6.2	6.52	7.37	3	3	10	10	0.07	0.24	0	NR	NR	24.5	121
Dec 2005	0	0.01	1.15	1.2	6.75	6.95	3	3	10	10	0.13	0.27	0	NR	NR	5	5
Jan 2006	0	0	0.2	0.2	7.31	7.31	3	3	10	10	0.3	0.3	0	NR	NR	11	11
Feb 2006	0	0	0.1	0.1	7.32	7.32	3	3	10	10	0.05	0.05	0	NR	NR	5	5
Mar 2006	0.02	0.02	1.9	1.9	7.06	7.06	3	3	10	10	0.14	0.14	0	NR	NR	5	5
Apr 2006	0.17	0.42	5.3	7.3	6.74	7.19	3	3	6	12	0.05	0.05	0	NR	NR	4.5	9
May 2006	0.33	0.82	10	14.2	6.78	6.85	3	3	10	10	0.05	0.05	0	NR	NR	5	5
Jun 2006	0.24	0.53	19.07	20.4	6.67	6.83	3	3	10	10	0.86	1.36	0	NR	NR	1.67	5
Jul 2006	0.17	0.24	21	21.4	6.6	6.83	4.08	4.08	10	10	0.36	0.56	0	NR	NR	2.5	5
Aug 2006	0.14	0.27	19.22	20.8	6.53	6.71	3	3	4.7	14	0.89	1.74	0	NR	NR	6.33	7
Sep 2006	0.08	0.86	11.88	15.3	6.58	6.99	3	3	23.7	71	0.59	1.7	0	NR	NR	5.67	12
Oct 2006	0.08	0.08	6.8	6.8	7.08	7.08	3	3	10	10	0.05	0.05	0	NR	NR	5	5
Nov 2006	0.04	0.04	5.7	5.7	7.24	7.24	3	3	10	10	0.05	0.05	0	NR	NR	5	5
Dec 2006	0.02	0.02	6.7	6.7	7.13	7.13	3	3	10	10	0.05	0.05	0	NR	NR	5	5
Jan 2007	0	0	2.6	2.6	6.95	6.95	3	3	10	10	0.24	0.24	0	NR	NR	5	5
Feb 2007	0	0	1.7	1.7	6.9	6.9	3	3	10	10	0.12	0.12	0	NR	NR	5	5
Mar 2007	0	0	2.1	2.1	6.85	6.85	3.6	3.6	16	16	0.39	0.39	0	NR	NR	5	5
Apr 2007	0.13	0.18	7.35	7.5	6.83	6.89	3	3	5	10	0.05	0.05	0	NR	NR	5	5
May 2007	0.1	0.21	10.73	10.9	7.12	7.34	3	3	10	10	0.04	0.13	0	NR	NR	5	5
Jun 2007	0.13	3.03	14.13	18.8	6.8	7.03	3	3	13.5	38	0.33	0.94	0	NR	NR	2.75	6

Compliance Point 004 - A

DMR	Flow rate		Water Temperature		pH		BOD5		TSS		Ammonia-Nitrogen		Oil and grease visual	Oxygen, dissolved [DO]	TPH	Total Recoverable Copper	
	Daily Min	Daily Max	30-Day Avg	Daily Max	Daily Min	Daily Max	30-Day Avg	Daily Max	30-Day Avg	Daily Max	30-Day Avg	Daily Max	Daily Max	Daily Min	Daily Max	30-Day Avg	Daily Max
	MGD	MGD	deg C	23.9 deg C	6.5 SU	8.8 SU	mg/L	mg/L	90 mg/L	158 mg/L	mg/L	mg/L	N=0;Y=1	mg/L	10 mg/L	ug/L	ug/L
Jul 2007	0.27	0.65	21.93	23.6	6.55	6.78	7.4	7.4	10	10	1.64	1.9	0	NR	NR	8.5	10
Aug 2007	0.22	0.31	20.44	22.3	6.5	6.59	3.1	3.1	10	10	0.7	0.77	0	NR	NR	6.5	7
Sep 2007	0.2	0.31	15.48	19.3	6.51	7.08	3	3	10	10	0.41	0.58	0	NR	NR	6.5	8
Oct 2007	0.14	0.24	10.38	12.2	6.55	6.9	3	3	10	10	0.61	1.06	0	NR	NR	8	10
Nov 2007	0.03	0.03	5.9	5.9	7.5	7.5	3	3	10	10	0.05	0.05	0	NR	NR	5	5
Dec 2007	0.03	0.03	5.1	5.1	7.45	7.45	3	3	10	10	0.06	0.06	0	NR	NR	5	5
Jan 2008	0	0	2.2	2.2	7.11	7.11	3	3	10	10	0.08	0.08	0	NR	NR	5	5
Feb 2008	0	0	1.1	1.1	7.07	7.07	3	3	10	10	0.09	0.09	0	NR	NR	10	10
Mar 2008	0	0	2.4	2.4	7.36	7.36	3	3	10	10	0.13	0.13	0	NR	NR	5	5
Apr 2008	0.01	0.73	2.8	4.8	6.88	7.23	3	3	10	10	0.1	0.21	0	10.72	NR	5	5
May 2008	0.91	2.52	6.1	8.7	6.77	6.85	3	3	10	10	0.05	0.05	0	10.16	NR	5	5
Jun 2008	0.42	1.25	12.68	16.3	6.86	7.03	3	3	10	10	0.07	0.13	0	8.77	NR	3.02	6.04
Jul 2008	0.14	0.35	18.3	19.2	6.96	7.1	3	3	4.7	14	0.11	0.21	0	6.91	NR	5	5
Aug 2008	0.24	0.31	19.75	20.3	6.88	6.98	3	3	10	10	0.65	1.22	0	6.92	NR	5	5
Sep 2008	0.13	0.31	14.4	15.7	6.91	7.25	3.2	3.2	10	10	0.83	0.99	0	8.47	NR	5	5
Oct 2008	0.25	0.3	9.68	14.2	6.79	7	3	3	10	10	1	1	0	8.69	NR	5	5
Nov 2008	0.07	0.1	4.5	4.6	7.35	7.37	3	3	10	10	0.05	0.05	0	11.67	NR	5	5
Dec 2008	0.04	0.04	3.3	3.3	7.72	7.72	3	3	10	10	0.11	0.11	0	10.95	NR	5	5
Jan 2009	0.03	0.03	4.25	4.3	7.65	7.72	3	3	10	10	0.12	0.12	0	10.82	NR	5	5
Feb 2009	0	0.04	4	4.1	7.42	7.78	BD	BD	BD	BD	0.1	0.1	0	10.48	NR	BD	BD
Mar 2009	0.09	0.09	4.4	4.4	7.46	7.46	BD	BD	BD	BD	0.06	0.06	0	9.64	NR	BD	BD
Apr 2009	0.13	1.25	6.2	7.6	6.79	7.21	BD	BD	BD	BD	BD	BD	0	11.57	NR	BD	BD
May 2009	0.17	0.38	8.9	9.6	7.13	7.17	BD	BD	BD	BD	BD	BD	0	8.24	NR	BD	BD
Jun 2009	0.25	0.42	15.24	18.3	7.02	7.19	BD	BD	BD	BD	0.03	0.08	0	8.38	NR	BD	BD

Compliance Point 004 - A

DMR	Flow rate		Water Temperature		pH		BOD5		TSS		Ammonia-Nitrogen		Oil and grease visual	Oxygen, dissolved [DO]	TPH	Total Recoverable Copper	
	Daily Min	Daily Max	30-Day Avg	Daily Max	Daily Min	Daily Max	30-Day Avg	Daily Max	30-Day Avg	Daily Max	30-Day Avg	Daily Max	Daily Max	Daily Min	Daily Max	30-Day Avg	Daily Max
	MGD	MGD	deg C	23.9 deg C	6.5 SU	8.8 SU	mg/L	mg/L	90 mg/L	158 mg/L	mg/L	mg/L	N=0;Y=1	mg/L	10 mg/L	ug/L	ug/L
Jul 2009	0.13	0.28	19.43	20.2	6.94	7.07	BD	BD	14	28	0.03	0.06	0	6.21	NR	BD	BD
Aug 2009	0.2	0.22	18.53	20.8	6.82	7.11	BD	BD	BD	BD	0.04	0.07	0	7.53	NR	2.5	5
Sep 2009	0.22	0.28	15.86	19	7.29	7.49	BD	BD	BD	BD	0.04	0.07	0	7.71	NR	BD	BD
Oct 2009	0.22	0.25	6.8	8.2	7.15	7.37	BD	BD	BD	BD	BD	BD	0	10.82	NR	BD	BD
Nov 2009	0.25	0.31	5.9	6.4	7.32	7.37	BD	BD	BD	BD	BD	BD	0	10.85	NR	BD	BD
Dec 2009	0.04	0.04	3.6	3.6	7.91	7.91	BD	BD	BD	BD	0.07	0.07	0	8.67	NR	BD	BD
Jan 2010	0.03	0.03	4.6	4.6	8.03	8.03	BD	BD	BD	BD	0.07	0.07	0	8.38	NR	BD	BD
Feb 2010	0	0.03	2.4	3.9	7.79	7.93	BD	BD	BD	BD	BD	BD	0	11.86	NR	5	5
Mar 2010	0	0.01	3.33	3.8	7.56	7.92	BD	BD	BD	BD	0.2	0.2	0	12.47	NR	BD	BD
Apr 2010	0.22	0.91	7.03	8.7	6.84	7.25	BD	BD	BD	BD	BD	BD	0	13.94	NR	BD	BD
May 2010	0.43	1.1	8.8	10.2	7.01	7.32	BD	BD	BD	BD	BD	BD	0	11.93	NR	BD	BD
Jun 2010	0.33	0.49	14.6	18.4	7.21	7.26	BD	BD	2.7	BD	0.08	0.15	0	8.28	NR	1.67	5
Jul 2010	0.2	0.25	19.25	19.9	7.25	7.32	BD	BD	5	10	0.12	0.15	0	7.48	NR	2.5	5
Aug 2010	0.14	0.22	19.15	19.9	7.26	7.32	BD	BD	BD	BD	0.04	0.07	0	7.01	NR	BD	BD
Sep 2010	ND	ND	ND	ND	ND	ND	ND	ND	ND	ND	ND	ND	ND	ND	ND	ND	ND
Oct 2010	0.1	0.21	12.25	14.1	7.12	7.12	3	3	12	24	0.03	0.05	0	7.81	NR	3	6
Nov 2010	0.03	0.03	5.2	5.2	7.39	7.39	BD	BD	BD	BD	0.09	0.09	0	11.65	NR	BD	BD
Dec 2010	0.03	0.03	4.6	4.6	7.51	7.51	BD	BD	BD	BD	0.07	0.07	0	10.38	NR	BD	BD
Jan 2011	0.02	0.02	4.6	4.6	7.53	7.53	BD	BD	BD	BD	BD	BD	0	10.3	NR	BD	BD
Feb 2011	0.02	0.02	4.8	4.8	7.76	7.76	BD	BD	BD	BD	BD	BD	0	9.63	NR	BD	BD
Mar 2011	0.04	0.04	6.5	6.5	7.71	7.71	3.2	3.2	BD	BD	0.05	0.05	0	11.23	NR	BD	BD
Apr 2011	0.22	0.3	6.5	7.8	7.19	7.22	BD	BD	BD	BD	BD	BD	0	10.78	NR	BD	BD
May 2011	0.35	0.47	8.25	9	7	8.8	BD	BD	BD	BD	BD	BD	0	7	NR	BD	BD
Jun 2011	0.28	0.67	15.43	18.4	7.08	7.21	BD	BD	BD	BD	0.05	0.09	0	6.33	NR	2	6

Compliance Point 004 - A

DMR	Flow rate		Water Temperature		pH		BOD5		TSS		Ammonia-Nitrogen		Oil and grease visual	Oxygen, dissolved [DO]	TPH	Total Recoverable Copper	
	Daily Min	Daily Max	30-Day Avg	Daily Max	Daily Min	Daily Max	30-Day Avg	Daily Max	30-Day Avg	Daily Max	30-Day Avg	Daily Max	Daily Max	Daily Min	Daily Max	30-Day Avg	Daily Max
	MGD	MGD	deg C	23.9 deg C	6.5 SU	8.8 SU	mg/L	mg/L	90 mg/L	158 mg/L	mg/L	mg/L	N=0;Y=1	mg/L	10 mg/L	ug/L	ug/L
Jul 2011	0.22	0.3	20.15	20.6	7.2	7.24	3.9	3.9	BD	BD	0.1	0.13	0	6.14	NR	2.5	5
Aug 2011	0.2	0.21	20.2	21.3	6.91	7.1	BD	BD	BD	BD	0.35	0.45	0	6.08	NR	3	6
Sep 2011	0.2	0.22	15.4	17.5	7.12	7.43	BD	BD	BD	BD	0.05	0.1	0	6.93	NR	7.5	9
Oct 2011	0.17	0.17	10.1	10.1	7.43	7.43	BD	BD	BD	BD	BD	BD	0	8.57	NR	BD	BD
Nov 2011	0.04	0.04	4.8	4.8	7.61	7.61	BD	BD	BD	BD	BD	BD	0	9.44	NR	BD	BD
Dec 2011	0	0.03	2.3	4.9	7.34	7.54	BD	BD	BD	BD	BD	BD	0	10.32	NR	6	6
Jan 2012	0	0.01	3.25	5.1	7.5	7.7	BD	BD	BD	BD	BD	BD	0	12.14	NR	BD	BD
Feb 2012	0.01	0.01	3.7	3.7	7.71	7.71	BD	BD	BD	BD	BD	BD	0	12.23	NR	BD	BD
Mar 2012	0.06	0.06	6.4	6.4	7.18	7.18	BD	BD	BD	BD	0.06	0.06	0	10.08	NR	BD	BD
Apr 2012	0.08	0.42	9.9	11.9	7.05	7.75	BD	BD	76.8	**307**	BD	BD	0	12.93	NR	3	9
May 2012	0.22	0.25	11.85	13.1	7.12	7.15	BD	BD	BD	BD	BD	BD	0	11.18	NR	BD	BD
Jun 2012	0.17	0.2	17.4	17.9	7.32	7.62	3.7	3.7	BD	BD	0.07	0.08	0	8.78	NR	BD	BD
Jul 2012	0.02	0.12	18.45	19.4	7.29	7.33	3.1	3.1	BD	BD	0.07	0.13	0	7.69	NR	3	6
Aug 2012	0.01	0.14	18.6	19.9	7.29	7.58	BD	BD	BD	BD	0.05	0.07	0	7.26	NR	4	6
Sep 2012	0.08	0.11	14	14.5	7.26	7.33	BD	BD	BD	BD	0.06	0.07	0	8.97	NR	BD	BD
Oct 2012	0.03	0.03	10.7	10.7	7.45	7.45	BD	BD	BD	BD	BD	BD	0	9.59	NR	BD	BD
Nov 2012	0.02	0.02	3.9	3.9	7.42	7.42	BD	BD	BD	BD	BD	BD	0	11.1	NR	BD	BD
Dec 2012	0.01	0.01	5	5	7.52	7.52	BD	BD	BD	BD	BD	BD	0	10.61	NR	BD	BD
Jan 2013	0.01	0.01	5.3	5.3	7.76	7.76	BD	BD	BD	BD	BD	BD	0	11.82	NR	BD	BD
Feb 2013	0.01	0.01	4.9	4.9	7.89	7.89	BD	BD	BD	BD	BD	BD	0	12.63	NR	BD	BD
Mar 2013	0.02	0.02	5.7	5.7	7.71	7.71	BD	BD	BD	BD	BD	BD	0	7.84	NR	BD	BD
Apr 2013	0.11	0.18	4.4	4.5	7.46	7.47	BD	BD	BD	BD	BD	BD	0	10.76	NR	BD	BD
May 2013	0.22	2.39	8.45	8.5	6.76	7.06	BD	BD	BD	BD	BD	BD	0	6.12	NR	BD	BD

Compliance Point 004 - A

DMR	Flow rate		Water Temperature		pH		BOD5		TSS		Ammonia-Nitrogen		Oil and grease visual	Oxygen, dissolved [DO]	TPH	Total Recoverable Copper	
	Daily Min	Daily Max	30-Day Avg	Daily Max	Daily Min	Daily Max	30-Day Avg	Daily Max	30-Day Avg	Daily Max	30-Day Avg	Daily Max	Daily Max	Daily Min	Daily Max	30-Day Avg	Daily Max
	MGD	MGD	deg C	23.9 deg C	6.5 SU	8.8 SU	mg/L	mg/L	90 mg/L	158 mg/L	mg/L	mg/L	N=0;Y=1	mg/L	10 mg/L	ug/L	ug/L
Jun 2013	0.12	0.8	12	14.3	6.85	7.28	BD	BD	BD	BD	BD	BD	0	9.04	NR	BD	BD
Jul 2013	0.04	0.08	14.37	14.5	7.34	7.42	BD	BD	BD	BD	BD	BD	0	8.77	NR	BD	BD
Aug 2013	0.03	0.04	14	15.1	7.4	7.48	BD	3	BD	10	BD	0.05	0	8.41	NR	BD	5
Sep 2013	0.17	0.17	16.85	18.8	7.19	7.21	BD	3	BD	10	0.03	0.05	0	7.47	NR	BD	5
Oct 2013	0.53	0.53	7	7	7.1	7.1	BD	3	BD	10	BD	0.05	0	9.44	NR	BD	5
Nov 2013	0.13	0.13	7.8	7.8	7.53	7.53	BD	3	BD	10	BD	0.05	0	8.98	NR	BD	5
Dec 2013	0.09	0.09	7.2	7.2	7.57	7.57	BD	3	BD	10	0.09	0.09	0	9.15	NR	BD	5
Jan 2014	0.04	0.04	5.3	5.4	7.48	7.53	BD	3	BD	10	0.18	0.18	0	8.72	NR	BD	5
Feb 2014	0.01	0.04	2.8	2.8	7.42	7.6	BD	3	BD	10	0.17	0.17	0	9.03	NR	BD	5
Mar 2014	0.01	0.01	4.1	4.1	7.42	7.42	BD	3	BD	10	0.44	0.44	0	8.54	NR	BD	5
Apr 2014	0.22	1.15	6.9	7.6	7.08	7.12	BD	3	BD	10	BD	0.05	0	9.24	NR	BD	5
May 2014	0.4	1.63	9.05	10.2	7.08	7.13	BD	3	BD	10	0.03	0.06	0	9.23	NR	BD	5
Jun 2014	0.24	0.3	14.05	15.1	7.1	7.26	4.5	4.5	BD	10	0.11	0.16	0	8.22	NR	BD	5
Jul 2014	0.21	0.31	17.73	21.8	7.08	7.24	BD	3	BD	10	0.06	0.08	0	8.48	NR	BD	5
Aug 2014	0.17	0.22	19.05	21.2	7.14	7.15	BD	3	BD	10	0.11	0.12	0	6.02	NR	BD	5
Sep 2014	0.14	0.18	16.75	17.6	7.24	7.25	BD	3	BD	10	0.07	0.09	0	6.46	NR	BD	5
Oct 2014	0.22	0.22	10.9	11.4	7.29	7.33	BD	3	BD	10	0.06	0.06	0	7.89	NR	BD	5
Nov 2014	0.07	0.16	6.6	9.3	7.58	7.63	3.1	3.1	BD	10	0.2	0.2	0	9.13	NR	BD	5
Dec 2014	0.06	0.08	4.95	5	7.55	7.57	7.1	7.1	BD	10	0.33	0.33	0	6.04	NR	BD	5
Jan 2015	0.07	0.07	4.15	4.6	7.54	7.6	4.6	4.6	BD	10	0.08	0.08	0	7.29	NR	BD	5
Feb 2015	0.09	0.16	6	6.4	7.49	7.57	BD	3	BD	10	0.16	0.16	0	6.72	NR	BD	5
Mar 2015	0.1	0.43	6.1	7.3	7.24	7.65	BD	3	BD	10	0.24	0.24	0	8.25	NR	BD	5
Apr 2015	0.11	0.2	9.03	10.8	7.5	7.71	BD	3	6.7	20	0.07	0.07	0	9.08	NR	BD	5
May 2015	0.55	1	8.2	9.8	6.86	7.18	BD	3	BD	10	BD	0.05	0	9.66	NR	BD	5

Compliance Point 004 - A

DMR	Flow rate		Water Temperature		pH		BOD5		TSS		Ammonia-Nitrogen		Oil and grease visual	Oxygen, dissolved [DO]	TPH	Total Recoverable Copper	
	Daily Min	Daily Max	30-Day Avg	Daily Max	Daily Min	Daily Max	30-Day Avg	Daily Max	30-Day Avg	Daily Max	30-Day Avg	Daily Max	Daily Max	Daily Min	Daily Max	30-Day Avg	Daily Max
	MGD	MGD	deg C	23.9 deg C	6.5 SU	8.8 SU	mg/L	mg/L	90 mg/L	158 mg/L	mg/L	mg/L	N=0;Y=1	mg/L	10 mg/L	ug/L	ug/L
Jun 2015	0.25	0.38	16.05	18	7.08	7.1	4.1	4.1	BD	10	0.08	0.08	0	7.68	NR	BD	5
Jul 2015	0.22	0.25	18.45	18.6	7.01	7.15	BD	3	BD	10	0.18	0.18	0	6.56	NR	BD	5
Aug 2015	0.17	0.43	16.9	18.2	6.89	7.17	BD	3	11.5	23	0.05	0.05	0	6.79	NR	BD	5
Sep 2015	0.17	0.18	16.15	16.6	6.97	7.1	BD	3	BD	10	BD	0.05	0	7.08	NR	BD	5
Oct 2015	0.13	0.14	11.7	14.6	7.15	7.44	BD	3	BD	10	BD	0.05	0	6.84	NR	BD	5
Nov 2015	0.04	0.04	6.5	7.1	7.73	7.74	BD	3	BD	10	0.06	0.06	0	9.46	NR	BD	5
Dec 2015	0.04	0.04	4.2	4.6	7.69	7.82	BD	3	BD	10	0.1	0.1	0	9.17	NR	BD	5
Jan 2016	0.02	0.04	4.4	6.2	7.67	7.88	BD	3	BD	10	0.08	0.08	0	8.53	NR	BD	5
Feb 2016	0.03	0.07	3.65	5.4	7.57	7.66	4.3	4.3	BD	10	0.26	0.26	0	8.91	NR	BD	5
Mar 2016	0.14	0.17	7.1	7.4	7.35	7.45	BD	3	BD	10	BD	0.05	0	9.13	NR	BD	5
Apr 2016	0.2	0.56	7.6	7.8	7.02	7.47	BD	3	BD	10	BD	0.05	0	9.05	NR	BD	5
May 2016	0.22	0.38	10.45	10.6	7.01	7.47	BD	3	BD	10	BD	0.05	0	8.8	NR	BD	5
Jun 2016	0.2	0.21	17.43	19.4	7.19	7.28	BD	3	BD	10	0.06	0.06	0	7.02	NR	BD	5
Jul 2016	0.17	0.2	18.65	19.3	7.18	7.22	BD	3	BD	10	BD	0.05	0	6.54	NR	BD	5
Aug 2016	0.17	0.17	17.2	19	7.21	7.3	BD	3	BD	10	BD	0.05	0	6.67	NR	BD	5
Sep 2016	0.14	0.16	15.35	16.1	7.23	7.26	BD	3	BD	10	BD	0.05	0	7.14	NR	BD	5
Oct 2016	0.11	0.12	9.5	9.8	7.34	7.41	BD	3	BD	10	BD	0.05	0	8.19	NR	BD	5
Nov 2016	0.1	0.12	7.6	7.9	7.39	7.44	BD	3	BD	10	BD	0.05	0	8.96	NR	BD	5
Dec 2016	0.02	0.04	2.95	4	7.31	7.67	BD	3	BD	10	BD	0.05	0	9.59	NR	BD	5
Jan 2017	0.02	0.02	3.15	3.5	7.52	7.58	BD	3	BD	10	0.07	0.07	0	8.61	NR	BD	5
Feb 2017	0.02	0.02	3.05	4.3	7.66	7.68	BD	3	BD	10	0.1	0.1	0	8.78	NR	BD	5
Mar 2017	0.05	0.06	6.2	8.2	7.58	7.62	BD	3	BD	10	BD	0.05	0	8.42	NR	BD	5
Apr 2017	0.08	0.09	8.8	12.5	7.59	7.64	BD	3	BD	10	BD	0.05	0	9.18	NR	BD	5
May 2017	0.17	0.25	12.8	14.4	7.1	7.31	BD	3	BD	10	0.05	0.05	0	7.46	NR	BD	5

Compliance Point 004 - A

DMR	Flow rate		Water Temperature		pH		BOD5		TSS		Ammonia-Nitrogen		Oil and grease visual	Oxygen, dissolved [DO]	TPH	Total Recoverable Copper	
	Daily Min	Daily Max	30-Day Avg	Daily Max	Daily Min	Daily Max	30-Day Avg	Daily Max	30-Day Avg	Daily Max	30-Day Avg	Daily Max	Daily Max	Daily Min	Daily Max	30-Day Avg	Daily Max
	MGD	MGD	deg C	23.9 deg C	6.5 SU	8.8 SU	mg/L	mg/L	90 mg/L	158 mg/L	mg/L	mg/L	N=0;Y=1	mg/L	10 mg/L	ug/L	ug/L
Jun 2017	0.18	0.31	17.65	17.8	7.12	7.23	BD	3	BD	10	BD	0.05	0	6.27	NR	BD	5
Jul 2017	0.16	0.16	20.7	21.5	7.18	7.21	BD	3	BD	10	BD	0.05	0	6.3	NR	BD	5
Aug 2017	0.02	0.17	15.3	19.4	7.29	7.63	BD	3	BD	10	BD	0.05	0	7.7	NR	BD	5
Sep 2017	0.01	0.01	12.1	13.7	7.52	7.76	BD	3	BD	10	BD	0.05	0	7.74	NR	BD	5
Oct 2017	0.01	0.03	8.05	9.3	7.69	7.85	BD	3	BD	10	BD	0.05	0	9.09	NR	BD	5
Nov 2017	0.02	0.03	4.55	5.3	7.51	7.75	BD	3	BD	10	BD	0.05	0	9.32	NR	BD	5
Dec 2017	0.02	0.02	3.25	3.7	7.73	7.75	BD	3	BD	10	BD	0.05	0	9.2	NR	BD	5
Jan 2018	0.02	0.02	2.4	2.8	7.54	7.61	BD	3	BD	10	0.06	0.06	0	8.69	NR	3.5	7
Feb 2018	0	0.01	1.6	2.5	7.44	7.75	BD	3	BD	10	0.57	0.57	0	8.38	NR	4.5	9
Mar 2018	0.02	0.02	3.7	4.1	7.61	7.69	BD	3	BD	10	BD	0.05	0	7.7	NR	2.5	5
Apr 2018	0.13	0.47	5.9	7.2	7.31	7.51	BD	3	BD	10	BD	0.05	0	7.28	NR	BD	5
May 2018	0.17	0.35	12.1	14.1	7.13	7.31	BD	3	BD	10	BD	0.05	0	8.39	NR	BD	5
Jun 2018	0.14	0.63	14.7	15	7.02	7.28	BD	3	BD	10	BD	0.05	0	5.15	NR	BD	5
Jul 2018	0.31	0.35	18.5	18.7	7.16	7.17	BD	3	BD	10	BD	0.05	0	6.36	NR	BD	5
Aug 2018	0.07	0.21	15.5	16.6	7.06	7.3	BD	3	BD	10	BD	0.05	0	7.01	NR	BD	5
Sep 2018	0.2	0.2	16.2	16.9	7.25	7.33	BD	3	BD	10	BD	0.05	0	6.98	NR	BD	5
Oct 2018	0.05	0.07	7.25	9	7.46	7.5	BD	3	BD	10	BD	0.05	0	8.78	NR	BD	5
Nov 2018	0.07	0.07	4.95	6.8	7.54	7.66	BD	3	BD	10	BD	0.05	0	7.9	NR	BD	5
Dec 2018	0.05	0.07	4.67	4.9	7.07	7.58	5.8	5.8	BD	10	BD	0.05	0	4.88	NR	BD	5
Jan 2019	0.04	0.04	2.35	2.5	7.67	7.69	BD	3	BD	10	0.21	0.21	0	8.83	NR	BD	5
Feb 2019	0.02	0.03	1	1.1	7.53	7.54	BD	3	BD	10	0.31	0.31	0	8.64	NR	BD	5
Mar 2019	0.02	0.03	3.15	4.1	7.53	7.54	BD	3	BD	10	0.14	0.14	0	9.49	NR	BD	5
Apr 2019	0.21	0.33	5.6	6.8	7.15	7.31	BD	3	BD	10	BD	0.05	0	9.64	NR	BD	5
May 2019	0.25	1.23	9.1	10.6	6.63	7.22	BD	3	BD	10	BD	0.05	0	9.34	NR	BD	5

Compliance Point 004 - A

DMR	Flow rate		Water Temperature		pH		BOD5		TSS		Ammonia-Nitrogen		Oil and grease visual	Oxygen, dissolved [DO]	TPH	Total Recoverable Copper	
	Daily Min	Daily Max	30-Day Avg	Daily Max	Daily Min	Daily Max	30-Day Avg	Daily Max	30-Day Avg	Daily Max	30-Day Avg	Daily Max	Daily Max	Daily Min	Daily Max	30-Day Avg	Daily Max
	MGD	MGD	deg C	23.9 deg C	6.5 SU	8.8 SU	mg/L	mg/L	90 mg/L	158 mg/L	mg/L	mg/L	N=0;Y=1	mg/L	10 mg/L	ug/L	ug/L
Jun 2019	0.22	0.31	14.25	16.3	6.85	7.23	BD	3	BD	10	BD	0.05	0	8.61	NR	BD	5
Jul 2019	0.31	0.45	17.6	19.1	7.02	7.05	BD	3	BD	10	0.05	0.05	0	7.83	NR	BD	5
Aug 2019	0.21	0.28	19.4	19.8	7.05	7.08	BD	3	BD	10	0.06	0.06	0	6.75	NR	BD	5
Sep 2019	0.17	0.17	16.35	17.9	7.18	7.28	BD	3	BD	10	BD	0.05	0	7.21	NR	BD	5
Oct 2019	0.06	0.11	7.5	9.1	7.39	7.64	BD	3	BD	10	BD	0.05	0	8.62	NR	BD	5
Nov 2019	0.13	0.2	5.75	6	7.5	7.62	BD	3	BD	10	BD	0.05	0	9.37	NR	BD	5
Dec 2019	0.09	0.13	4.75	5.1	7.46	7.5	BD	3	BD	10	BD	0.05	0	9.96	NR	BD	5
Jan 2020	0.08	0.08	4	4.8	7.65	7.68	BD	3	BD	10	0.08	0.08	0	10.13	NR	BD	5
Feb 2020	0.04	0.06	2.45	3.2	7.67	7.74	BD	3	BD	10	0.09	0.09	0	10.28	NR	3	6
Mar 2020	0.06	0.16	5.6	6	7.34	7.73	BD	3	BD	10	0.14	0.14	0	9.85	NR	BD	5
Apr 2020	0.55	1.13	5.95	7	7	7.04	BD	3	BD	10	BD	0.05	0	10.28	NR	BD	5
May 2020	0.22	0.43	11.25	13.9	6.98	7.16	BD	3	BD	10	BD	0.05	0	9.36	NR	BD	5
Jun 2020	0.14	0.22	16.9	18.4	7.11	7.23	BD	3	8	13	0.07	0.07	0	8.05	NR	2	6
Jul 2020	0.02	0.14	14.95	17	7.28	7.42	BD	3	6.5	13	0.07	0.07	0	7.36	NR	BD	5
Aug 2020	0.02	0.17	15.9	19.9	7.04	7.37	BD	3	BD	10	BD	0.05	0	8.2	NR	BD	5
Sep 2020	0.18	0.18	13.05	14.9	7.02	7.12	BD	3	BD	10	BD	0.05	0	8.62	NR	BD	5
Oct 2020	0.01	0.04	8.8	12.5	7.68	7.68	BD	3	BD	10	BD	0.05	0	9.33	NR	BD	5
Nov 2020	0.03	0.04	4	4.8	7.63	7.69	BD	3	BD	10	0.09	0.09	0	9.7	NR	BD	5
Dec 2020	0.05	0.07	5.6	5.8	7.54	7.7	BD	3	BD	10	BD	0.05	0	9.09	NR	BD	5
Jan 2021	0.04	0.08	3.3	4.1	7.43	7.61	BD	3	BD	10	BD	0.05	0	9.14	NR	BD	5
Feb 2021	0.04	0.11	2.1	2.6	7.51	7.53	BD	3	BD	10	BD	0.05	0	9.24	NR	BD	5
Mar 2021	0.05	0.05	4.75	5.3	7.51	7.67	BD	3	BD	10	BD	0.05	0	8.04	NR	BD	5
Apr 2021	0.13	0.14	6.8	7.2	7.53	7.58	4.1	4.1	BD	10	BD	0.05	0	9.07	NR	BD	5
May 2021	0.22	0.31	10.6	12.5	7.03	7.3	BD	3	BD	10	0.06	0.06	0	8.77	NR	BD	5

Compliance Point 004 - A

DMR	Flow rate		Water Temperature		pH		BOD5		TSS		Ammonia-Nitrogen		Oil and grease visual	Oxygen, dissolved [DO]	TPH	Total Recoverable Copper	
	Daily Min	Daily Max	30-Day Avg	Daily Max	Daily Min	Daily Max	30-Day Avg	Daily Max	30-Day Avg	Daily Max	30-Day Avg	Daily Max	Daily Max	Daily Min	Daily Max	30-Day Avg	Daily Max
	MGD	MGD	deg C	23.9 deg C	6.5 SU	8.8 SU	mg/L	mg/L	90 mg/L	158 mg/L	mg/L	mg/L	N=0;Y=1	mg/L	10 mg/L	ug/L	ug/L
Jun 2021	0.17	0.27	17.6	19.8	7.07	7.23	7.4	7.4	11.7	20	BD	0.05	0	7.51	NR	1.7	5
Jul 2021	0.14	0.21	21.3	22.8	7.11	7.24	BD	3	BD	10	0.05	0.05	0	6.95	NR	BD	5
Aug 2021	0.01	0.02	14.4	14.8	7.54	7.55	BD	3	BD	10	BD	0.05	0	7.71	NR	BD	5
Sep 2021	0.13	0.18	14.5	15.6	7.21	7.34	BD	3	BD	10	BD	0.05	0	7.68	NR	BD	5
Oct 2021	0.05	0.11	11.4	14.1	7.38	7.44	3.3	3.3	BD	10	BD	0.05	0	7.65	NR	BD	5
Nov 2021	0.08	0.1	6.4	8.7	7.4	7.47	BD	3	BD	10	BD	0.05	0	8.68	NR	BD	5
Dec 2021	0.06	0.07	4.83	7.3	7.28	7.53	6.4	6.4	3.3	10	BD	0.05	0	8.92	NR	BD	5
Jan 2022	0.05	0.06	3.95	4.2	7.46	7.48	BD	3	BD	10	BD	0.05	0	8.74	NR	BD	5
Feb 2022	0.05	0.05	2.15	3.3	7.6	7.67	BD	3	BD	10	0.13	0.13	0	9.07	NR	BD	5
Mar 2022	0.05	0.08	5.05	6.7	7.48	7.51	BD	3	BD	10	0.08	0.08	0	10.31	NR	BD	5
Apr 2022	0.11	0.12	7.65	8.5	7.37	7.48	BD	3	6.5	13	BD	0.05	0	9.14	NR	BD	5
May 2022	0.24	1.03	10.7	13.6	7.16	7.2	BD	3	BD	10	BD	0.05	0	9.65	NR	BD	5
Jun 2022	0.22	0.69	14.73	17.3	7.12	7.23	BD	3	BD	10	BD	0.05	0	7.48	NR	1.67	5
Jul 2022	0.1	0.13	19.65	20	7.21	7.23	BD	3	BD	10	BD	0.05	0	6.9	NR	BD	5
Aug 2022	0.02	0.14	18.65	21.1	7.12	7.43	BD	3	BD	10	BD	0.05	0	7.32	NR	BD	5
Sep 2022	0.02	0.27	15.35	15.7	7.08	7.34	BD	3	BD	10	0.06	0.06	0	7.11	NR	BD	5
Oct 2022	0.08	0.22	13.4	14.3	7.05	7.4	BD	3	BD	10	BD	BD	0	8.29	NR	BD	5
Nov 2022	0.04	0.05	6	7.2	7.28	7.73	BD	3	BD	10	BD	BD	0	9.95	NR	BD	5
Dec 2022	0.02	0.02	8.6	9.3	7.2	7.45	BD	3	BD	10	BD	BD	0	9.7	NR	BD	5

Compliance Point 004 - A

DMR	WAD Cyanide		Total Recoverable Chromium		Nitrate-Nitrogen		Total Recoverable Nickel		Total Hardness		Total Recoverable Lead		Total Recoverable Silver		Total Recoverable Zinc		Total Recoverable Cadmium	
	30-Day Avg	Daily Max	30-Day Avg	Daily Max	30-Day Avg	Daily Max	30-Day Avg	Daily Max	30-Day Avg	Daily Min	30-Day Avg	Daily Max	30-Day Avg	Daily Max	30-Day Avg	Daily Max	30-Day Avg	Daily Max
	ug/L	22 ug/L	11 ug/L	16 ug/L	mg/L	mg/L	ug/L	ug/L	mg/L	mg/L	ug/L	ug/L	ug/L	ug/L	ug/L	ug/L	ug/L	ug/L
Jul 2005	0	10	0	1	4.1	4.46	15	16	348.5	AR	0	1	0	1	0	50	0.5	1
Aug 2005	0	10	0	1	3.55	3.9	24.5	31	418.5	AR	0	1	0	1	0	50	0	1
Sep 2005	0	10	0	1	3.92	4.24	27.67	33	416	AR	0	1	0	1	0	50	0	1
Oct 2005	BD	BD	BD	BD	3.45	3.45	26	26	429	AR	BD	BD	BD	BD	BD	BD	BD	BD
Nov 2005	10	10	1	1	1.6	4.49	25.5	47	433.8	303	1	1	1	1	13.75	55	0.33	2
Dec 2005	10	10	1	1	0.71	0.71	17.5	19	374.5	364	1	1	1	1	50	50	1	1
Jan 2006	10	10	1	1	0.74	0.74	12	12	269	269	1	1	1	1	50	50	1	1
Feb 2006	10	10	1	1	1.04	1.04	14	14	367	367	1	1	1	1	50	50	1	1
Mar 2006	10	10	1	1	0.29	0.29	5	5	141	141	1	1	1	1	52	52	1	1
Apr 2006	10	10	1.5	3	1.13	1.42	6.5	8	189	184	1	1	1	1	50	50	1	1
May 2006	10	10	1	1	0.79	0.87	5	5	138.5	131	1	1	1	1	43.5	87	1	1
Jun 2006	10	10	1	1	2.45	3.77	23	36	535.3	299	1	1	1	1	50	50	1	1
Jul 2006	10	10	1	1	4.46	5.43	33	41	567	564	1	1	1	1	50	50	1	1
Aug 2006	10	10	1	1	3.92	4.53	43.33	67	474.7	301	1	1	0.33	1	19	57	1	1
Sep 2006	10	10	1	1	2.45	3.48	20	50	261.3	162	2.33	7	1	1	25	75	1	1
Oct 2006	10	10	1	1	1.19	1.19	5	5	232	232	1	1	1	1	50	50	1	1
Nov 2006	10	10	1	1	1.48	1.48	7	7	300	300	1	1	1	1	50	50	1	1
Dec 2006	10	10	1	1	2.06	2.06	9	9	352	352	1	1	1	1	50	50	1	1
Jan 2007	10	10	1	1	0.51	0.51	18	18	358	358	1	1	1	1	50	50	1	1
Feb 2007	10	10	1	1	0.74	0.74	16	16	434	434	1	1	1	1	50	50	1	1
Mar 2007	10	10	2	2	0.32	0.32	6	6	146	146	2	2	1	1	50	50	1	1
Apr 2007	10	10	1	1	1.06	1.14	5	5	186.5	174	1	1	1	1	50	50	1	1
May 2007	10	10	1	1	1.19	1.35	7.67	9	227	194	1	1	1	1	50	50	1	1
Jun 2007	10	10	0.5	2	1.36	1.91	8.5	12	246	85.1	0.75	2	0.5	1	50	50	1	1

Compliance Point 004 - A

DMR	WAD Cyanide		Total Recoverable Chromium		Nitrate-Nitrogen		Total Recoverable Nickel		Total Hardness		Total Recoverable Lead		Total Recoverable Silver		Total Recoverable Zinc		Total Recoverable Cadmium	
	30-Day Avg	Daily Max	30-Day Avg	Daily Max	30-Day Avg	Daily Max	30-Day Avg	Daily Max	30-Day Avg	Daily Min	30-Day Avg	Daily Max	30-Day Avg	Daily Max	30-Day Avg	Daily Max	30-Day Avg	Daily Max
	ug/L	22 ug/L	11 ug/L	16 ug/L	mg/L	mg/L	ug/L	ug/L	mg/L	mg/L	ug/L	ug/L	ug/L	ug/L	ug/L	ug/L	ug/L	ug/L
Jul 2007	10	10	1	1	3.05	3.26	18	18	492.5	471	1	1	0.5	1	50	50	1	1
Aug 2007	10	10	1	1	2.75	3.32	15.5	17	402	388	1	1	0.5	1	50	50	1	1
Sep 2007	10	10	1	1	1.6	1.92	29	30	653	645	1	1	1	1	50	50	1	1
Oct 2007	10	10	1	1	1.55	1.68	55	67	706.5	512	1	1	1	1	39.5	79	1	1
Nov 2007	10	10	1	1	1.33	1.33	7	7	261	261	1	1	1	1	50	50	1	1
Dec 2007	10	10	1	1	2.1	2.1	15	15	403	403	1	1	1	1	56	56	1	1
Jan 2008	10	10	1	1	0.35	0.35	15	15	399	399	1	1	1	1	50	50	1	1
Feb 2008	10	10	1	1	0.3	0.3	15	15	420	420	1	1	1	1	73	73	1	1
Mar 2008	10	10	1	1	0.75	0.75	10	10	253	253	1	1	1	1	50	50	1	1
Apr 2008	10	10	1	1	1.05	1.2	3.5	7	156.5	117	1	1	1	2	50	50	1	1
May 2008	10	10	0.63	1.88	0.77	0.83	5	5	93.6	87.3	1.15	2	1	1	50	50	1	1
Jun 2008	10	10	1	1	0.99	1.47	3.16	6.32	176.5	135	1	1	2.08	4.15	50	50	1	1
Jul 2008	10	10	1	1	2.45	3.19	8.67	10	301.7	242	1	1	1	1	50	50	1	1
Aug 2008	BD	BD	1	1	2.58	2.8	7.5	9	337.5	290	1	1	1	1	50	50	1	1
Sep 2008	BD	BD	1	1	3.56	4.66	9	10	396.5	305	1	1	1	1	50	50	1	1
Oct 2008	BD	BD	1	1	3.63	3.63	16	16	526	526	1	1	1	1	50	50	1	1
Nov 2008	BD	BD	1	1	1.31	1.31	5	5	154	154	1	1	1	1	50	50	1	1
Dec 2008	BD	BD	1	1	1.25	1.25	8	8	273	273	1	1	1	1	50	50	1	1
Jan 2009	BD	BD	1	1	1.21	1.21	8	8	266	266	1	1	1	1	50	50	1	1
Feb 2009	BD	BD	BD	BD	1.9	1.9	13	13	309	309	BD	BD	BD	BD	BD	BD	BD	BD
Mar 2009	BD	BD	BD	BD	1.66	1.66	8	8	192	192	BD	BD	BD	BD	BD	BD	BD	BD
Apr 2009	BD	BD	BD	BD	1.04	1.48	4	8	138.1	99.2	BD	BD	BD	BD	BD	BD	BD	BD
May 2009	BD	BD	BD	BD	0.71	0.95	BD	BD	144.5	126	BD	BD	BD	BD	35	70	BD	BD
Jun 2009	BD	BD	BD	BD	0.76	1.06	10.33	14	240.3	128	BD	BD	BD	BD	BD	BD	BD	BD

Compliance Point 004 - A

DMR	WAD Cyanide		Total Recoverable Chromium		Nitrate-Nitrogen		Total Recoverable Nickel		Total Hardness		Total Recoverable Lead		Total Recoverable Silver		Total Recoverable Zinc		Total Recoverable Cadmium	
	30-Day Avg	Daily Max	30-Day Avg	Daily Max	30-Day Avg	Daily Max	30-Day Avg	Daily Max	30-Day Avg	Daily Min	30-Day Avg	Daily Max	30-Day Avg	Daily Max	30-Day Avg	Daily Max	30-Day Avg	Daily Max
	ug/L	22 ug/L	11 ug/L	16 ug/L	mg/L	mg/L	ug/L	ug/L	mg/L	mg/L	ug/L	ug/L	ug/L	ug/L	ug/L	ug/L	ug/L	ug/L
Jul 2009	BD	BD	BD	BD	1.4	1.59	15.5	18	359	312	BD	BD	0.58	1	BD	BD	BD	BD
Aug 2009	BD	BD	BD	BD	1.11	1.13	25.5	36	419	287	BD	BD	BD	BD	BD	BD	BD	BD
Sep 2009	BD	BD	BD	BD	1.08	1.13	26	31	425	361	BD	BD	BD	BD	BD	BD	BD	BD
Oct 2009	BD	BD	BD	BD	1.08	1.08	16	16	286	286	BD	BD	BD	BD	BD	BD	BD	BD
Nov 2009	BD	BD	BD	BD	1.09	1.09	8	8	207	207	BD	BD	BD	BD	BD	BD	BD	BD
Dec 2009	BD	BD	BD	BD	1.19	1.19	BD	BD	248	248	BD	BD	BD	BD	BD	BD	BD	BD
Jan 2010	BD	BD	BD	BD	1.23	1.23	BD	BD	241	241	BD	BD	BD	BD	BD	BD	BD	BD
Feb 2010	BD	BD	BD	BD	4.27	4.27	19	19	595	595	BD	BD	BD	BD	BD	BD	BD	BD
Mar 2010	BD	BD	BD	BD	0.59	0.59	6	6	169	169	BD	BD	BD	BD	BD	BD	BD	BD
Apr 2010	BD	BD	BD	BD	1.3	1.52	7.5	8	194.5	190	BD	BD	BD	BD	BD	BD	BD	BD
May 2010	BD	BD	BD	BD	0.67	0.76	6	6	173.5	169	BD	BD	BD	BD	BD	BD	BD	BD
Jun 2010	BD	BD	BD	BD	0.86	1.09	10.67	11	222	216	BD	BD	BD	BD	24	72	BD	BD
Jul 2010	BD	BD	BD	BD	1.96	2.69	20.5	24	359	320	BD	BD	1	2	28	56	BD	BD
Aug 2010	BD	BD	BD	BD	2.74	3.19	21.5	31	364	201	BD	BD	BD	BD	BD	BD	BD	BD
Sep 2010	ND	ND	ND	ND	ND	ND	ND	ND	ND	ND	ND	ND	ND	ND	ND	ND	ND	ND
Oct 2010	10	10	1	1	1.07	1.13	28	36	420.5	326	0.5	1	1	1	50	50	1	1
Nov 2010	BD	BD	BD	BD	1.18	1.18	12	12	331	331	BD	BD	BD	BD	BD	BD	BD	BD
Dec 2010	BD	BD	BD	BD	1.02	1.02	9	9	281	281	BD	BD	BD	BD	BD	BD	BD	BD
Jan 2011	BD	BD	BD	BD	1.35	1.35	BD	BD	284	284	BD	BD	BD	BD	BD	BD	BD	BD
Feb 2011	BD	BD	BD	BD	1.14	1.14	BD	BD	255	255	BD	BD	BD	BD	BD	BD	BD	BD
Mar 2011	BD	BD	2	2	1.22	1.22	BD	BD	170	170	BD	BD	BD	BD	BD	BD	BD	BD
Apr 2011	BD	BD	BD	BD	0.68	0.79	BD	BD	123	121	BD	BD	BD	BD	BD	BD	BD	BD
May 2011	BD	BD	BD	BD	0.4	0.5	5.5	11	265	164	BD	BD	BD	BD	BD	BD	BD	BD
Jun 2011	BD	BD	BD	BD	0.65	0.99	10	13	248.7	178	BD	BD	BD	BD	BD	BD	BD	BD

Compliance Point 004 - A

DMR	WAD Cyanide		Total Recoverable Chromium		Nitrate-Nitrogen		Total Recoverable Nickel		Total Hardness		Total Recoverable Lead		Total Recoverable Silver		Total Recoverable Zinc		Total Recoverable Cadmium	
	30-Day Avg	Daily Max	30-Day Avg	Daily Max	30-Day Avg	Daily Max	30-Day Avg	Daily Max	30-Day Avg	Daily Min	30-Day Avg	Daily Max	30-Day Avg	Daily Max	30-Day Avg	Daily Max	30-Day Avg	Daily Max
	ug/L	22 ug/L	11 ug/L	16 ug/L	mg/L	mg/L	ug/L	ug/L	mg/L	mg/L	ug/L	ug/L	ug/L	ug/L	ug/L	ug/L	ug/L	ug/L
Jul 2011	BD	BD	BD	BD	2.53	2.97	18	22	612	526	BD	BD	BD	BD	BD	BD	BD	BD
Aug 2011	BD	BD	BD	BD	2.69	2.93	22	30	544.5	439	BD	BD	BD	BD	BD	BD	BD	BD
Sep 2011	BD	BD	BD	BD	2.4	2.73	32	32	677	630	BD	BD	BD	BD	BD	BD	BD	BD
Oct 2011	BD	BD	BD	BD	1.54	1.54	34	34	618	618	BD	BD	BD	BD	BD	BD	BD	BD
Nov 2011	BD	BD	BD	BD	0.9	0.9	15	15	399	399	BD	BD	BD	BD	BD	BD	BD	BD
Dec 2011	BD	BD	BD	BD	4.55	4.55	35	35	936	936	BD	BD	BD	BD	BD	BD	BD	BD
Jan 2012	BD	BD	BD	BD	1.3	1.98	13	15	438.5	429	BD	BD	BD	BD	BD	BD	BD	BD
Feb 2012	BD	BD	BD	BD	2.17	2.17	11	11	379	379	BD	BD	BD	BD	BD	BD	BD	BD
Mar 2012	BD	BD	BD	BD	2.13	2.13	10	10	279	279	BD	BD	BD	BD	BD	BD	BD	BD
Apr 2012	BD	BD	BD	BD	1.36	2.39	13.33	27	358.7	230	0.67	2	BD	BD	19.33	58	BD	BD
May 2012	BD	BD	BD	BD	0.81	1.05	19	23	390	339	BD	BD	BD	BD	BD	BD	BD	BD
Jun 2012	BD	BD	BD	BD	0.39	0.52	37.55	42	663	584	BD	BD	BD	BD	BD	BD	BD	BD
Jul 2012	BD	BD	BD	BD	0.64	0.84	36	43	698.5	642	BD	BD	BD	BD	BD	BD	BD	BD
Aug 2012	BD	BD	BD	BD	0.37	0.53	37.67	40	737.7	693	BD	BD	BD	BD	BD	BD	BD	BD
Sep 2012	BD	BD	BD	BD	0.46	0.68	29.5	44	552	279	BD	BD	BD	BD	BD	BD	BD	BD
Oct 2012	BD	BD	BD	BD	0.62	0.62	15	15	349	349	BD	BD	BD	BD	BD	BD	BD	BD
Nov 2012	BD	BD	BD	BD	1.24	1.24	10	10	395	395	BD	BD	BD	BD	BD	BD	BD	BD
Dec 2012	BD	BD	BD	BD	1.41	1.41	7	7	375	375	BD	BD	BD	BD	BD	BD	BD	BD
Jan 2013	BD	BD	BD	BD	1.38	1.38	5	5	318	318	BD	BD	BD	BD	BD	BD	BD	BD
Feb 2013	BD	BD	BD	BD	1.38	1.38	BD	BD	267	267	BD	BD	BD	BD	BD	BD	BD	BD
Mar 2013	BD	BD	BD	BD	1.27	1.27	5	5	309	309	BD	BD	BD	BD	BD	BD	BD	BD
Apr 2013	BD	BD	BD	BD	1.35	1.43	BD	BD	184.5	175	BD	BD	BD	BD	BD	BD	BD	BD
May 2013	BD	BD	BD	BD	2.09	2.75	2.5	5	181.5	136	BD	BD	BD	BD	29	58	BD	BD

Compliance Point 004 - A

DMR	WAD Cyanide		Total Recoverable Chromium		Nitrate-Nitrogen		Total Recoverable Nickel		Total Hardness		Total Recoverable Lead		Total Recoverable Silver		Total Recoverable Zinc		Total Recoverable Cadmium	
	30-Day Avg	Daily Max	30-Day Avg	Daily Max	30-Day Avg	Daily Max	30-Day Avg	Daily Max	30-Day Avg	Daily Min	30-Day Avg	Daily Max	30-Day Avg	Daily Max	30-Day Avg	Daily Max	30-Day Avg	Daily Max
	ug/L	22 ug/L	11 ug/L	16 ug/L	mg/L	mg/L	ug/L	ug/L	mg/L	mg/L	ug/L	ug/L	ug/L	ug/L	ug/L	ug/L	ug/L	ug/L
Jun 2013	BD	BD	BD	BD	1.11	1.41	BD	BD	187.5	166	BD	BD	BD	BD	BD	BD	BD	BD
Jul 2013	BD	BD	BD	BD	1.43	1.61	6.33	8	258.3	216	BD	BD	BD	BD	BD	BD	BD	BD
Aug 2013	BD	10	BD	1	1.83	1.88	8.5	9	332	315	BD	1	BD	1	BD	50	BD	1
Sep 2013	BD	10	0.5	1	1.24	1.27	15.5	19	373	305	BD	1	BD	1	BD	50	BD	1
Oct 2013	BD	10	BD	1	0.67	0.67	5	5	150	150	BD	1	BD	1	BD	50	BD	1
Nov 2013	BD	10	BD	1	0.72	0.72	BD	5	163	163	BD	1	BD	1	BD	50	BD	1
Dec 2013	BD	10	BD	1	0.92	0.92	11	11	353	353	BD	1	BD	1	BD	50	BD	1
Jan 2014	BD	10	BD	1	1.18	1.18	16	16	524	524	BD	1	BD	1	BD	50	BD	1
Feb 2014	BD	10	BD	1	1.71	1.71	23	23	570	570	BD	1	BD	1	BD	50	BD	1
Mar 2014	BD	10	BD	1	0.34	0.34	21	21	639	639	BD	1	BD	1	BD	50	BD	1
Apr 2014	BD	10	BD	1	1.46	2.09	7	8	202	145	BD	1	BD	1	BD	50	BD	1
May 2014	BD	10	0.5	1	0.69	0.77	7	9	169	139	0.5	1	BD	1	BD	50	BD	1
Jun 2014	BD	10	BD	1	1.1	1.35	13	14	347	323	BD	1	BD	1	BD	50	BD	1
Jul 2014	BD	10	BD	1	0.95	1.59	16.33	19	477	387	BD	1	BD	1	BD	50	BD	1
Aug 2014	BD	10	BD	1	0.47	0.61	23	25	502.5	495	BD	1	BD	1	BD	50	BD	1
Sep 2014	BD	10	BD	1	0.51	0.55	19.5	21	570	519	BD	1	BD	1	BD	50	BD	1
Oct 2014	BD	10	BD	1	0.59	0.59	16	16	445	445	BD	1	BD	1	BD	50	BD	1
Nov 2014	BD	10	BD	1	0.58	0.58	23	23	757	757	BD	1	BD	1	BD	50	BD	1
Dec 2014	BD	10	BD	1	0.44	0.44	31	31	902	902	BD	1	BD	1	BD	50	BD	1
Jan 2015	BD	10	BD	1	0.44	0.44	31	31	820	820	BD	1	BD	1	BD	50	BD	1
Feb 2015	BD	10	BD	1	0.62	0.62	18	18	702	702	BD	1	BD	1	BD	50	BD	1
Mar 2015	BD	10	BD	1	0.5	0.5	14	14	565	565	BD	1	BD	1	BD	50	BD	1
Apr 2015	BD	10	BD	1	1.02	1.02	20.33	28	485.7	420	BD	1	BD	1	BD	50	BD	1
May 2015	BD	10	BD	1	0.87	0.87	7	8	171	155	BD	1	BD	1	BD	50	BD	1

Compliance Point 004 - A

DMR	WAD Cyanide		Total Recoverable Chromium		Nitrate-Nitrogen		Total Recoverable Nickel		Total Hardness		Total Recoverable Lead		Total Recoverable Silver		Total Recoverable Zinc		Total Recoverable Cadmium	
	30-Day Avg	Daily Max	30-Day Avg	Daily Max	30-Day Avg	Daily Max	30-Day Avg	Daily Max	30-Day Avg	Daily Min	30-Day Avg	Daily Max	30-Day Avg	Daily Max	30-Day Avg	Daily Max	30-Day Avg	Daily Max
	ug/L	22 ug/L	11 ug/L	16 ug/L	mg/L	mg/L	ug/L	ug/L	mg/L	mg/L	ug/L	ug/L	ug/L	ug/L	ug/L	ug/L	ug/L	ug/L
Jun 2015	BD	10	BD	1	0.44	0.44	14	16	354.5	284	BD	1	BD	1	BD	50	BD	1
Jul 2015	BD	10	BD	1	0.77	0.77	21	21	501.5	473	BD	1	BD	1	BD	50	BD	1
Aug 2015	BD	10	3.5	7	0.73	0.73	12	13	277	238	1	2	BD	1	BD	50	BD	1
Sep 2015	BD	10	BD	1	0.72	0.72	22.5	32	481.5	369	BD	1	BD	1	BD	50	BD	1
Oct 2015	BD	10	BD	1	1	1	21	21	513	513	BD	1	BD	1	BD	50	BD	1
Nov 2015	BD	10	BD	1	0.86	0.86	25	25	664	664	BD	1	BD	1	BD	50	BD	1
Dec 2015	BD	10	BD	1	0.73	0.73	27	27	843	843	BD	1	BD	1	54	54	BD	1
Jan 2016	BD	10	BD	1	0.42	0.42	38	38	1,110	1,110	BD	1	BD	1	BD	50	BD	1
Feb 2016	BD	10	BD	1	BD	0.05	35	35	1,150	1,150	BD	1	BD	1	BD	50	BD	1
Mar 2016	BD	10	BD	1	0.83	0.83	13	13	391	391	BD	1	BD	1	BD	50	BD	1
Apr 2016	BD	10	BD	1	0.78	0.78	7.5	9	299	245	BD	1	BD	1	26.5	53	BD	1
May 2016	BD	10	BD	1	0.57	0.57	12	15	280.5	222	BD	1	BD	1	32	64	BD	1
Jun 2016	BD	10	BD	1	0.74	0.74	23.67	27	516.3	448	BD	1	BD	1	BD	50	BD	1
Jul 2016	BD	10	BD	1	0.65	0.65	27	28	535.5	518	BD	1	BD	1	BD	50	BD	1
Aug 2016	BD	10	BD	1	0.63	0.63	29	32	558.5	550	BD	1	BD	1	BD	50	BD	1
Sep 2016	BD	10	BD	1	0.43	0.43	29	29	492.5	492	BD	1	BD	1	BD	50	BD	1
Oct 2016	BD	10	BD	1	0.61	0.61	38	38	625	625	BD	1	BD	1	BD	50	BD	1
Nov 2016	BD	10	BD	1	0.82	0.82	32	32	549	549	BD	1	BD	1	BD	50	BD	1
Dec 2016	BD	10	BD	1	0.37	0.37	38	38	769	769	BD	1	BD	1	BD	50	BD	1
Jan 2017	BD	10	BD	1	0.4	0.4	46	46	798	798	BD	1	BD	1	BD	50	BD	1
Feb 2017	BD	10	BD	1	0.63	0.63	35.5	45	861	632	BD	1	BD	1	BD	50	BD	1
Mar 2017	BD	10	BD	1	0.61	0.61	29	29	644	644	BD	1	BD	1	BD	50	BD	1
Apr 2017	BD	10	BD	1	BD	0.05	22	26	515	472	BD	1	BD	1	BD	50	BD	1
May 2017	BD	10	BD	1	0.6	0.6	17.5	18	280	229	BD	1	BD	1	BD	50	BD	1

Compliance Point 004 - A

DMR	WAD Cyanide		Total Recoverable Chromium		Nitrate-Nitrogen		Total Recoverable Nickel		Total Hardness		Total Recoverable Lead		Total Recoverable Silver		Total Recoverable Zinc		Total Recoverable Cadmium	
	30-Day Avg	Daily Max	30-Day Avg	Daily Max	30-Day Avg	Daily Max	30-Day Avg	Daily Max	30-Day Avg	Daily Min	30-Day Avg	Daily Max	30-Day Avg	Daily Max	30-Day Avg	Daily Max	30-Day Avg	Daily Max
	ug/L	22 ug/L	11 ug/L	16 ug/L	mg/L	mg/L	ug/L	ug/L	mg/L	mg/L	ug/L	ug/L	ug/L	ug/L	ug/L	ug/L	ug/L	ug/L
Jun 2017	BD	10	BD	1	0.63	0.63	31.5	32	505	474	BD	1	BD	1	BD	50	BD	1
Jul 2017	BD	10	BD	1	0.55	0.55	39.5	40	645.5	609	BD	1	BD	1	BD	50	BD	1
Aug 2017	BD	10	BD	1	1.05	1.05	19.33	36	446.7	348	BD	1	BD	1	BD	50	BD	1
Sep 2017	BD	10	BD	1	0.79	0.79	11.5	12	389.5	388	BD	1	BD	1	BD	50	BD	1
Oct 2017	BD	10	BD	1	0.54	0.54	17.5	22	406.5	354	BD	1	BD	1	BD	50	BD	1
Nov 2017	BD	10	BD	1	0.75	0.75	29	37	712.5	582	BD	1	BD	1	BD	50	BD	1
Dec 2017	BD	10	BD	1	0.44	0.44	38	41	915	885	BD	1	BD	1	BD	50	BD	1
Jan 2018	BD	10	BD	1	0.53	0.53	42	42	1,010	1,010	BD	1	BD	1	BD	50	BD	1
Feb 2018	BD	10	BD	1	0.26	0.26	45	45	1,060	1,060	BD	1	BD	1	BD	50	BD	1
Mar 2018	BD	10	BD	1	0.47	0.47	40	40	939	939	BD	1	BD	1	BD	50	BD	1
Apr 2018	BD	10	BD	1	0.53	0.53	11	13	336.5	241	BD	1	BD	1	BD	50	BD	1
May 2018	BD	10	BD	1	0.74	0.74	14.3	18	377.3	343	BD	1	BD	1	20.3	61	BD	1
Jun 2018	BD	10	BD	1	0.79	0.79	6.5	13	310.5	159	BD	1	BD	1	BD	50	BD	1
Jul 2018	BD	10	BD	1	0.83	0.83	13.5	14	358.5	343	BD	1	BD	1	BD	50	BD	1
Aug 2018	BD	10	BD	1	1.33	1.33	19	22	460.5	431	BD	1	BD	1	BD	50	BD	1
Sep 2018	BD	10	BD	1	0.56	0.56	22	24	481	476	BD	1	BD	1	BD	50	BD	1
Oct 2018	BD	10	BD	1	0.7	0.7	23	27	589.5	415	BD	1	BD	1	BD	50	BD	1
Nov 2018	BD	10	BD	1	0.48	0.48	27	27	799	777	BD	1	BD	1	BD	50	BD	1
Dec 2018	BD	10	BD	1	0.24	0.24	31	32	924.5	915	BD	1	BD	1	BD	50	BD	1
Jan 2019	BD	10	BD	1	0.34	0.34	28.5	32	988.5	897	BD	1	BD	1	BD	50	BD	1
Feb 2019	BD	10	BD	1	0.48	0.48	30	33	890.5	837	BD	1	BD	1	BD	50	BD	1
Mar 2019	BD	10	BD	1	0.29	0.29	26	32	839.5	698	BD	1	BD	1	BD	50	BD	1
Apr 2019	BD	10	BD	1	0.84	0.84	12	13	278.5	251	BD	1	BD	1	BD	50	BD	1
May 2019	BD	10	BD	1	1.1	1.1	7	12	238.3	141	BD	1	1	3	BD	50	BD	1

Compliance Point 004 - A

DMR	WAD Cyanide		Total Recoverable Chromium		Nitrate-Nitrogen		Total Recoverable Nickel		Total Hardness		Total Recoverable Lead		Total Recoverable Silver		Total Recoverable Zinc		Total Recoverable Cadmium	
	30-Day Avg	Daily Max	30-Day Avg	Daily Max	30-Day Avg	Daily Max	30-Day Avg	Daily Max	30-Day Avg	Daily Min	30-Day Avg	Daily Max	30-Day Avg	Daily Max	30-Day Avg	Daily Max	30-Day Avg	Daily Max
	ug/L	22 ug/L	11 ug/L	16 ug/L	mg/L	mg/L	ug/L	ug/L	mg/L	mg/L	ug/L	ug/L	ug/L	ug/L	ug/L	ug/L	ug/L	ug/L
Jun 2019	BD	10	BD	1	1.15	1.15	15	16	390	344	BD	1	BD	1	BD	50	BD	1
Jul 2019	BD	10	BD	1	0.77	0.77	12	13	302	263	BD	1	BD	1	BD	50	BD	1
Aug 2019	BD	10	BD	1	0.8	0.8	8	16	409	389	BD	1	BD	1	BD	50	BD	1
Sep 2019	BD	10	BD	1	0.59	0.59	17.5	18	473	469	BD	1	BD	1	BD	50	BD	1
Oct 2019	BD	10	BD	1	0.72	0.72	14	15	385.3	371	BD	1	BD	1	BD	50	BD	1
Nov 2019	BD	10	BD	1	0.47	0.47	10	12	412	357	BD	1	BD	1	BD	50	BD	1
Dec 2019	BD	10	BD	1	1.24	1.24	14	15	590.5	526	BD	1	BD	1	BD	50	BD	1
Jan 2020	BD	10	BD	1	0.89	0.89	18.5	21	808.5	757	BD	1	BD	1	BD	50	BD	1
Feb 2020	BD	10	BD	1	BD	0.05	25.5	26	980.5	891	BD	1	BD	1	BD	50	BD	1
Mar 2020	BD	10	BD	1	0.83	0.83	13.5	16	613	467	BD	1	BD	1	BD	50	BD	1
Apr 2020	BD	10	1	2	1.1	1.1	6.5	13	180.5	144	BD	1	BD	1	BD	50	BD	1
May 2020	BD	10	BD	1	0.48	0.48	8.5	11	246	207	BD	1	BD	1	BD	50	BD	1
Jun 2020	BD	10	0.33	1	0.91	0.91	16.67	23	299	240	BD	1	BD	1	BD	50	BD	1
Jul 2020	BD	10	BD	1	0.55	0.55	33	59	349.5	323	BD	1	BD	1	BD	50	BD	1
Aug 2020	BD	10	BD	1	1.61	1.61	9.5	14	288	252	BD	1	BD	1	BD	50	BD	1
Sep 2020	BD	10	BD	1	0.33	0.33	14	17	366	262	BD	1	BD	1	BD	50	BD	1
Oct 2020	BD	10	BD	1	0.31	0.31	12	18	514.5	322	BD	1	BD	1	BD	50	BD	1
Nov 2020	BD	10	BD	1	0.06	0.06	25	25	1,190	1,180	BD	1	BD	1	BD	50	BD	1
Dec 2020	BD	10	BD	1	BD	0.05	27	32	1,150	1,040	BD	1	BD	1	BD	50	BD	1
Jan 2021	BD	10	BD	1	BD	0.05	29	32	1,155	1,030	BD	1	BD	1	BD	50	BD	1
Feb 2021	BD	10	BD	1	0.18	0.18	22	25	956.5	763	BD	1	BD	1	BD	50	BD	1
Mar 2021	BD	10	BD	1	BD	0.05	24.5	28	1,160	1,090	BD	1	BD	1	BD	50	BD	1
Apr 2021	BD	10	BD	1	0.63	0.63	10	12	434	366	0.5	1	BD	1	BD	50	BD	1
May 2021	BD	10	BD	1	0.64	0.64	8	9	265	220	BD	1	BD	1	BD	50	BD	1

Compliance Point 004 - A

DMR	WAD Cyanide		Total Recoverable Chromium		Nitrate-Nitrogen		Total Recoverable Nickel		Total Hardness		Total Recoverable Lead		Total Recoverable Silver		Total Recoverable Zinc		Total Recoverable Cadmium	
	30-Day Avg	Daily Max	30-Day Avg	Daily Max	30-Day Avg	Daily Max	30-Day Avg	Daily Max	30-Day Avg	Daily Min	30-Day Avg	Daily Max	30-Day Avg	Daily Max	30-Day Avg	Daily Max	30-Day Avg	Daily Max
	ug/L	22 ug/L	11 ug/L	16 ug/L	mg/L	mg/L	ug/L	ug/L	mg/L	mg/L	ug/L	ug/L	ug/L	ug/L	ug/L	ug/L	ug/L	ug/L
Jun 2021	BD	10	BD	1	0.43	0.43	18	19	376.7	342	BD	1	BD	1	BD	50	0.3	1
Jul 2021	BD	10	BD	1	0.72	0.72	13.5	14	421.5	405	BD	1	BD	1	BD	50	BD	1
Aug 2021	BD	10	BD	1	1.18	1.18	3.5	7	349	311	BD	1	BD	1	BD	50	BD	1
Sep 2021	BD	10	BD	1	0.43	0.43	22	23	539	532	BD	1	BD	1	BD	50	BD	1
Oct 2021	BD	10	BD	1	0.24	0.24	16.5	22	735	591	BD	1	BD	1	BD	50	BD	1
Nov 2021	BD	10	BD	1	0.69	0.69	27	30	675.5	647	BD	1	BD	1	BD	50	BD	1
Dec 2021	BD	10	BD	1	0.33	0.33	24.67	30	914	834	BD	1	BD	1	BD	50	BD	1
Jan 2022	BD	10	BD	1	0.15	0.15	25.5	27	1,125	1,110	BD	1	BD	1	BD	50	BD	1
Feb 2022	BD	10	BD	1	0.12	0.12	22.5	24	1,100	1,080	BD	1	BD	1	BD	50	BD	1
Mar 2022	BD	10	BD	1	0.39	0.39	12.5	14	653	583	BD	1	BD	1	BD	50	BD	1
Apr 2022	BD	10	0.5	1	0.37	0.37	27	45	504.5	453	BD	1	BD	1	BD	50	BD	1
May 2022	BD	10	BD	1	1.04	1.04	5.5	11	185	113	BD	1	BD	1	BD	50	BD	1
Jun 2022	BD	10	0.33	1	1.04	1.04	20	36	271.3	136	BD	1	BD	1	BD	50	BD	1
Jul 2022	BD	10	BD	1	1.03	1.03	36	47	525	464	BD	1	BD	1	BD	50	BD	1
Aug 2022	BD	10	BD	1	1.02	1.02	29.5	50	472	349	BD	1	BD	1	BD	50	BD	1
Sep 2022	BD	10	BD	1	0.87	0.87	15.5	17	341	209	BD	1	BD	1	BD	50	BD	1
Oct 2022	BD	10	BD	1	0.4	0.4	15.5	25	302	246	BD	1	BD	1	BD	50	BD	1
Nov 2022	BD	10	BD	1	0.77	0.77	5	5	245	235	BD	1	BD	1	BD	50	BD	1
Dec 2022	BD	10	BD	1	0.8	0.8	1.67	5	265.3	245	BD	1	BD	1	BD	50	BD	1

Compliance Point 004 - A

DMR	Total Recoverable Selenium		Total Recoverable Mercury		Total Recoverable Arsenic		Total Recoverable Iron		Total Sulfate		Total Sodium		Total Recoverable Aluminum		TDS	
	30-Day Avg	Daily Max	30-Day Avg	Daily Max	30-Day Avg	Daily Max	30-Day Avg	Daily Max	30-Day Avg	Daily Max	30-Day Avg	Daily Max	30-Day Avg	Daily Max	30-Day Avg	Daily Max
	4.6 ug/L	ug/L	.012 ug/L	1.4 ug/L	ug/L	ug/L	ug/L	ug/L	mg/L	mg/L	mg/L	mg/L	ug/L	ug/L	mg/L	mg/L
Jul 2005	3.25	7	0	0.2	3	6	563.5	1,010	566.5	641	137.25	175	225.5	410	935.5	967
Aug 2005	0	5	0	0.2	0	5	591.5	635	800	971	208.5	243	202	217	1,235	1,470
Sep 2005	2.75	6	0	0.2	0	5	408.67	732	902	1,110	256.33	309	131.33	254	1,350	1,630
Oct 2005	3	6	BD	BD	BD	BD	352	352	852	852	237	237	139	139	1,280	1,280
Nov 2005	1.88	10	BD	BD	5	5	406.67	526	585.83	1,090	141.67	227	48.67	61	990.83	1,690
Dec 2005	BD	BD	BD	BD	5	5	172.5	181	416.5	430	94.25	95.5	40	51	784.5	800
Jan 2006	BD	BD	BD	BD	5	5	204	204	227	227	60	60	23	23	516	516
Feb 2006	BD	BD	BD	BD	50	50	91	91	356	356	95.5	95.5	17	17	730	730
Mar 2006	BD	BD	BD	BD	5	5	831	831	89.4	89.4	17.2	17.2	155	155	225	225
Apr 2006	BD	BD	BD	BD	3	6	836	1,540	167.5	190	28.05	34.7	1,452.5	2,780	338.5	369
May 2006	BD	BD	BD	BD	5	5	148	162	83.45	84.7	13.45	13.8	222	288	217.5	235
Jun 2006	1.83	6	BD	0.2	5	5	413	567	656	1,070	86.17	143	146	252	1,032	1,650
Jul 2006	3	7	BD	0.2	5	5	345	372	907.5	1,070	128	150	99.5	116	1,400	1,650
Aug 2006	2	5	BD	BD	5	5	429.33	619	766	1,080	98.77	141	252.67	468	1,197	1,620
Sep 2006	BD	BD	BD	BD	4	12	1,425.33	3,700	382.67	826	32.77	36.4	977.67	2,460	660.33	1,250
Oct 2006	BD	BD	BD	BD	5	5	212	212	227	227	27.3	27.3	66	66	419	419
Nov 2006	BD	BD	BD	BD	5	5	155	155	215	215	33.1	33.1	53	53	481	481
Dec 2006	BD	BD	BD	BD	5	5	76	76	317	317	48.8	48.8	40	40	591	591
Jan 2007	BD	BD	BD	BD	5	5	50	50	233	233	71.6	71.6	21	21	650	650
Feb 2007	BD	BD	BD	BD	5	5	50	50	313	313	81.1	81.1	10	10	727	727
Mar 2007	BD	BD	BD	BD	5	5	905	905	47.7	47.7	39.4	39.4	1,640	1,640	302	302
Apr 2007	BD	BD	BD	BD	5	5	159	182	137.5	158	21.15	23.6	165	198	299	317
May 2007	BD	BD	BD	BD	5	5	277.67	545	182.33	223	32.77	48.3	84.67	139	382.67	447
Jun 2007	BD	BD	BD	BD	3.5	8	634.5	1,170	307.5	429	71.83	100	500.75	1,600	534.5	688

Compliance Point 004 - A

DMR	Total Recoverable Selenium		Total Recoverable Mercury		Total Recoverable Arsenic		Total Recoverable Iron		Total Sulfate		Total Sodium		Total Recoverable Aluminum		TDS	
	30-Day Avg	Daily Max	30-Day Avg	Daily Max	30-Day Avg	Daily Max	30-Day Avg	Daily Max	30-Day Avg	Daily Max	30-Day Avg	Daily Max	30-Day Avg	Daily Max	30-Day Avg	Daily Max
	4.6 ug/L	ug/L	.012 ug/L	1.4 ug/L	ug/L	ug/L	ug/L	ug/L	mg/L	mg/L	mg/L	mg/L	ug/L	ug/L	mg/L	mg/L
Jul 2007	1.5	6	BD	BD	5	5	346	389	877.5	948	226	250	45.5	52	1,345	1,360
Aug 2007	BD	BD	BD	BD	5	5	345	471	816.5	926	163.5	173	52.5	68	1,150	1,240
Sep 2007	BD	BD	BD	BD	5	5	200	276	1,125	1,180	249.5	255	28	36	1,605	1,740
Oct 2007	3.75	8	BD	BD	5	5	405.5	486	1,490	1,750	322	338	37.5	52	2,055	2,470
Nov 2007	BD	BD	BD	BD	5	5	125	125	227	227	47.1	47.1	27	27	480	480
Dec 2007	BD	BD	BD	BD	5	5	104	104	406	406	82.6	82.6	46	46	777	777
Jan 2008	BD	BD	BD	BD	5	5	50	50	467	467	87.3	87.3	17	17	820	820
Feb 2008	BD	BD	BD	BD	5	5	50	50	456	456	90.3	90.3	18	18	811	811
Mar 2008	BD	BD	BD	BD	5	5	155	155	213	213	66.7	66.7	40	40	520	520
Apr 2008	BD	BD	BD	BD	5	5	247.5	395	128.4	189	30.8	49.7	365.5	699	310.5	427
May 2008	BD	BD	BD	BD	5	5	623	946	61.17	74.1	10.16	11.5	1,119.67	1,580	182.33	210
Jun 2008	BD	BD	BD	BD	5	5	422	451	180	251	27.65	39.8	373	592	298.5	398
Jul 2008	2.4	6	BD	BD	5	5	393.33	527	397.67	493	65.43	84.7	109	176	645.67	764
Aug 2008	1.5	6	BD	BD	5	5	659	990	489.5	605	93.7	129	50.5	51	794	987
Sep 2008	4.25	6	BD	BD	5	5	295	302	662	815	134	153	36	41	928.5	1,210
Oct 2008	2.2	6	BD	BD	5	5	855	855	886	886	172	172	44	44	1,300	1,300
Nov 2008	BD	BD	BD	BD	5	5	455	455	95.2	95.2	25.1	25.1	635	635	321	321
Dec 2008	BD	BD	BD	BD	5	5	300	300	198	198	45.5	45.5	32	32	473	473
Jan 2009	0	BD	BD	BD	5	5	357	357	178	178	43.2	43.2	32	32	487	487
Feb 2009	2.5	5	BD	BD	BD	BD	308	308	293	293	48.7	48.7	64	64	595	595
Mar 2009	0	BD	BD	BD	BD	BD	628	628	168	168	28.9	28.9	246	246	353	353
Apr 2009	0	BD	BD	BD	BD	BD	258	303	103.4	162	16.05	20.6	281.5	462	260.5	341
May 2009	0	BD	BD	BD	BD	BD	200	204	71.25	82.1	14.3	15.1	117.5	153	239.5	277
Jun 2009	0	BD	BD	BD	2	6	369	440	244.67	369	28.07	39.9	101.33	180	438.67	629

Compliance Point 004 - A

DMR	Total Recoverable Selenium		Total Recoverable Mercury		Total Recoverable Arsenic		Total Recoverable Iron		Total Sulfate		Total Sodium		Total Recoverable Aluminum		TDS	
	30-Day Avg	Daily Max	30-Day Avg	Daily Max	30-Day Avg	Daily Max	30-Day Avg	Daily Max	30-Day Avg	Daily Max	30-Day Avg	Daily Max	30-Day Avg	Daily Max	30-Day Avg	Daily Max
	4.6 ug/L	ug/L	.012 ug/L	1.4 ug/L	ug/L	ug/L	ug/L	ug/L	mg/L	mg/L	mg/L	mg/L	ug/L	ug/L	mg/L	mg/L
Jul 2009	3.5	8	BD	BD	7.5	9	1,462	2,490	399.5	463	45.65	50.9	129.5	179	674	779
Aug 2009	1.75	7	BD	BD	BD	BD	430	449	449.5	592	63.5	85.3	70.5	100	760	1,010
Sep 2009	3.6	6	BD	BD	BD	BD	350	391	540.5	637	66.55	75.3	42	48	817.5	974
Oct 2009	3	7	BD	BD	5	5	247	247	336	336	42.5	42.5	38	38	519	519
Nov 2009	0	BD	BD	BD	BD	BD	262	262	221	221	26.4	26.4	126	126	391	391
Dec 2009	0	BD	BD	BD	BD	BD	371	371	125	125	22.2	22.2	67	67	350	350
Jan 2010	0	BD	BD	BD	BD	BD	455	455	118	118	21.7	21.7	77	77	367	367
Feb 2010	3.33	10	BD	BD	BD	BD	182	182	665	665	66	66	37	37	1,080	1,080
Mar 2010	0	BD	BD	BD	BD	BD	629	629	90.8	90.8	25.8	25.8	116	116	285	285
Apr 2010	0	BD	BD	BD	BD	BD	215.5	272	166	179	22.3	23.4	162.5	216	322	339
May 2010	0	BD	BD	BD	BD	BD	161	175	139.5	144	19.1	19.9	167.5	171	188.5	292
Jun 2010	0	BD	BD	BD	3.67	6	464	618	229.67	249	31.73	37	207.33	440	394.67	409
Jul 2010	0	BD	BD	BD	BD	BD	533	547	440	486	60.2	64.3	99.5	103	662.5	718
Aug 2010	3.75	9	BD	BD	BD	BD	406.5	421	428.5	614	59.75	82.3	77	91	663	927
Sep 2010	ND	ND	ND	ND	ND	ND	ND	ND	ND	ND	ND	ND	ND	ND	ND	ND
Oct 2010	3.5	7	BD	BD	4	8	833	1,100	485	601	89.45	113	162.5	213	754	916
Nov 2010	0	BD	BD	BD	BD	BD	235	235	300	300	47.6	47.6	32	32	547	547
Dec 2010	0	BD	BD	BD	BD	BD	129	129	196	196	39.6	39.6	22	22	456	456
Jan 2011	0	BD	BD	BD	BD	BD	53	53	135	135	24.4	24.4	21	21	404	404
Feb 2011	0	BD	BD	BD	BD	BD	57	57	111	111	23.6	23.6	22	22	346	346
Mar 2011	0	BD	BD	BD	BD	BD	275	275	88.9	88.9	18.8	18.8	398	398	249	249
Apr 2011	0	BD	BD	BD	BD	BD	288.5	310	68.75	71.2	11.05	11.8	361.5	428	200	203
May 2011	0	BD	BD	BD	BD	BD	237	258	259	403	33.5	51.7	155.5	188	439	644
Jun 2011	0	BD	BD	BD	BD	BD	342.33	457	270.33	409	41.8	66.2	148.33	219	402.67	568

Compliance Point 004 - A

DMR	Total Recoverable Selenium		Total Recoverable Mercury		Total Recoverable Arsenic		Total Recoverable Iron		Total Sulfate		Total Sodium		Total Recoverable Aluminum		TDS	
	30-Day Avg	Daily Max	30-Day Avg	Daily Max	30-Day Avg	Daily Max	30-Day Avg	Daily Max	30-Day Avg	Daily Max	30-Day Avg	Daily Max	30-Day Avg	Daily Max	30-Day Avg	Daily Max
	4.6 ug/L	ug/L	.012 ug/L	1.4 ug/L	ug/L	ug/L	ug/L	ug/L	mg/L	mg/L	mg/L	mg/L	ug/L	ug/L	mg/L	mg/L
Jul 2011	0	BD	BD	BD	BD	BD	566	617	881.5	1,060	160.5	198	116	126	1,218	1,460
Aug 2011	0	BD	BD	BD	BD	BD	691	755	910	1,010	176.5	177	46.5	49	1,295	1,410
Sep 2011	4	6	BD	BD	BD	BD	364.5	385	1,024.5	1,080	186	192	27	28	1,435	1,500
Oct 2011	0	BD	BD	BD	BD	BD	337	337	903	903	166	166	39	39	1,280	1,280
Nov 2011	0	BD	BD	BD	BD	BD	150	150	433	433	75.3	75.3	30	30	741	741
Dec 2011	2.68	10.7	BD	BD	BD	BD	89	89	1,030	1,030	124	124	23	23	1,550	1,550
Jan 2012	3	6	BD	BD	BD	BD	36.5	73	371.5	422	61.95	82.1	17.5	18	725	782
Feb 2012	0	BD	BD	BD	BD	BD	BD	BD	352	352	59.6	59.6	41	41	695	695
Mar 2012	0	BD	BD	BD	BD	BD	505	505	237	237	35.2	35.2	850	850	429	429
Apr 2012	1.75	7	BD	BD	2	6	275.67	597	318	532	43.4	68.7	152	331	556	882
May 2012	0	BD	BD	BD	BD	BD	370.5	526	409.5	484	55.05	62.5	44.5	59	630.5	732
Jun 2012	0	BD	BD	BD	BD	BD	445	557	814	897	123	137	10	20	1,195	1,300
Jul 2012	0	BD	BD	BD	BD	BD	288	488	766.5	904	123.5	142	16	18	1,180	1,320
Aug 2012	0	BD	BD	BD	BD	BD	222.33	259	846.67	921	156.67	167	13.67	15	1,276.67	1,340
Sep 2012	3	6	BD	BD	BD	BD	207	266	673.5	983	124	175	14	15	1,015.5	1,470
Oct 2012	0	BD	BD	BD	BD	BD	96	96	316	316	62.6	62.6	12	12	574	574
Nov 2012	0	BD	BD	BD	BD	BD	131	131	305	305	51.4	51.4	13	13	597	597
Dec 2012	0	BD	BD	BD	BD	BD	BD	BD	177	177	30.6	30.6	17	17	478	478
Jan 2013	0	BD	BD	BD	BD	BD	BD	BD	141	141	18.1	18.1	BD	BD	409	409
Feb 2013	0	BD	BD	BD	BD	BD	BD	BD	131	131	17.7	17.7	10	10	402	402
Mar 2013	0	BD	BD	BD	BD	BD	BD	BD	142	142	20.2	20.2	17	17	396	396
Apr 2013	0	BD	BD	BD	BD	BD	125.5	153	120	122	16.4	17.5	152.5	186	226.5	262
May 2013	0	BD	BD	BD	BD	BD	119.5	156	118.65	155	15.75	18.8	127	196	267.5	322

Compliance Point 004 - A

DMR	Total Recoverable Selenium		Total Recoverable Mercury		Total Recoverable Arsenic		Total Recoverable Iron		Total Sulfate		Total Sodium		Total Recoverable Aluminum		TDS	
	30-Day Avg	Daily Max	30-Day Avg	Daily Max	30-Day Avg	Daily Max	30-Day Avg	Daily Max	30-Day Avg	Daily Max	30-Day Avg	Daily Max	30-Day Avg	Daily Max	30-Day Avg	Daily Max
	4.6 ug/L	ug/L	.012 ug/L	1.4 ug/L	ug/L	ug/L	ug/L	ug/L	mg/L	mg/L	mg/L	mg/L	ug/L	ug/L	mg/L	mg/L
Jun 2013	0	BD	BD	BD	BD	BD	111	146	88.45	98.3	13.8	14.9	60.5	80	214.5	219
Jul 2013	0	BD	BD	BD	BD	BD	154.33	174	135.33	156	22.1	25.8	39.67	66	347.33	395
Aug 2013	0	5	BD	0.2	BD	5	103.5	110	200.5	202	27.7	28.2	20	20	449.5	459
Sep 2013	3	6	BD	0.2	7	7	313	337	389	465	46.2	52.6	45.5	53	595.5	709
Oct 2013	0	5	BD	0.2	BD	5	380	380	66.7	66.7	10.1	10.1	762	762	212	212
Nov 2013	0	5	BD	0.2	BD	5	181	181	61.3	61.3	9.11	9.11	123	123	188	188
Dec 2013	0	5	BD	0.2	BD	5	359	359	273	273	29.5	29.5	24	24	527	527
Jan 2014	0	5	BD	0.2	BD	5	544	544	478	478	49.2	49.2	26	26	775	775
Feb 2014	2.5	5	BD	0.2	BD	5	638	638	571	571	60.7	60.7	21	21	880	880
Mar 2014	0	5	BD	0.2	BD	5	1,350	1,350	598	598	71.5	71.5	29	29	979	979
Apr 2014	0	5	BD	0.2	BD	5	322.5	427	159.4	229	19.85	26.1	216.5	241	313.5	403
May 2014	0	5	BD	0.2	9.5	12	304	532	120.3	157	13.9	16.8	340	652	252.5	291
Jun 2014	3	6	BD	0.2	25.5	27	440	541	343.5	357	33.7	36.3	45.5	70	516.5	543
Jul 2014	2	6	BD	0.2	16.67	22	396.33	587	492.7	600	57.6	70	80.33	172	787.33	924
Aug 2014	0	5	BD	0.2	13.5	16	479	719	561.5	601	65.55	70.7	25	39	843	887
Sep 2014	0	5	BD	0.2	9.5	11	222.5	277	657	709	81.9	89.2	9.5	19	988	1,090
Oct 2014	0	5	BD	0.2	7	7	275	275	578	578	58.3	58.3	42	42	743	743
Nov 2014	0	5	BD	0.2	10	10	357	357	NR	NR	NR	NR	13	13	1,320	1,320
Dec 2014	0	5	BD	0.2	19	19	767	767	969	969	122	122	36	36	1,540	1,540
Jan 2015	0	5	BD	0.2	16	16	799	799	914	914	120	120	34	34	1,410	1,410
Feb 2015	0	5	BD	0.2	14	14	527	527	NR	NR	NR	NR	59	59	1,170	1,170
Mar 2015	0	5	BD	0.2	9	9	429	429	NR	NR	NR	NR	45	45	925	925
Apr 2015	3.67	6	BD	0.2	10.67	13	237	237	356	356	42.1	42.1	54	54	641	641
May 2015	0	5	BD	0.2	BD	5	256	256	133	133	NR	NR	513	513	296	296

Compliance Point 004 - A

DMR	Total Recoverable Selenium		Total Recoverable Mercury		Total Recoverable Arsenic		Total Recoverable Iron		Total Sulfate		Total Sodium		Total Recoverable Aluminum		TDS	
	30-Day Avg	Daily Max	30-Day Avg	Daily Max	30-Day Avg	Daily Max	30-Day Avg	Daily Max	30-Day Avg	Daily Max	30-Day Avg	Daily Max	30-Day Avg	Daily Max	30-Day Avg	Daily Max
	4.6 ug/L	ug/L	.012 ug/L	1.4 ug/L	ug/L	ug/L	ug/L	ug/L	mg/L	mg/L	mg/L	mg/L	ug/L	ug/L	mg/L	mg/L
Jun 2015	0	5	BD	0.2	9.5	13	292	292	NR	NR	NR	NR	169	169	420	420
Jul 2015	0	5	BD	0.2	14	16	359	359	512	512	54.5	54.5	35	35	790	790
Aug 2015	0	5	BD	0.2	7.5	9	304	304	NR	NR	NR	NR	BD	10	514	514
Sep 2015	3	6	BD	0.2	4.5	9	234	234	NR	NR	NR	NR	21	21	618	618
Oct 2015	0	5	BD	0.2	5	5	410	410	565	565	65.7	65.7	25	25	856	856
Nov 2015	0	5	BD	0.2	BD	5	432	432	NR	NR	NR	NR	40	40	1,150	1,150
Dec 2015	0	5	BD	0.2	BD	5	300	300	NR	NR	NR	NR	17	17	1,520	1,520
Jan 2016	3.67	6	BD	0.2	9	9	522	522	1,270	1,270	150	150	26	26	1,990	1,990
Feb 2016	0	5	BD	0.2	6	6	666	666	NR	NR	NR	NR	19	19	2,090	2,090
Mar 2016	0	5	BD	0.2	6	6	480	480	NR	NR	NR	NR	422	422	672	672
Apr 2016	0	5	BD	0.2	3.5	7	229	229	207	207	26	26	332	332	374	374
May 2016	0	5	BD	0.2	2.5	5	396	396	NR	NR	NR	NR	528	528	363	363
Jun 2016	4	6	BD	0.2	7.33	8	216	216	NR	NR	NR	NR	33	33	748	748
Jul 2016	0	5	BD	0.2	8	8	157	157	608	608	69.3	69.3	11	11	917	917
Aug 2016	0	5	BD	0.2	8	8	234	234	NR	NR	NR	NR	18	18	942	942
Sep 2016	0	5	BD	0.2	7	7	273	273	NR	NR	NR	NR	15	15	910	910
Oct 2016	0	5	BD	0.2	6	6	174	174	783	783	102	102	BD	10	1,180	1,180
Nov 2016	3	6	BD	0.2	BD	5	148	148	NR	NR	NR	NR	BD	10	993	993
Dec 2016	0	5	BD	0.2	BD	5	104	104	NR	NR	NR	NR	13	13	1,390	1,390
Jan 2017	0	5	BD	0.2	7	7	141	141	1,220	1,220	167	167	18	18	1,910	1,910
Feb 2017	0	5	BD	0.2	11	16	179	179	NR	NR	NR	NR	33	33	1,580	2,030
Mar 2017	0	5	BD	0.2	8	8	189	189	NR	NR	NR	NR	54	54	1,190	1,190
Apr 2017	0	5	BD	0.2	12	13	244	244	500	500	73.4	73.4	45	45	807	807
May 2017	2	6	BD	0.2	4.5	9	73	73	NR	NR	NR	NR	23	23	536	536

Compliance Point 004 - A

DMR	Total Recoverable Selenium		Total Recoverable Mercury		Total Recoverable Arsenic		Total Recoverable Iron		Total Sulfate		Total Sodium		Total Recoverable Aluminum		TDS	
	30-Day Avg	Daily Max	30-Day Avg	Daily Max	30-Day Avg	Daily Max	30-Day Avg	Daily Max	30-Day Avg	Daily Max	30-Day Avg	Daily Max	30-Day Avg	Daily Max	30-Day Avg	Daily Max
	4.6 ug/L	ug/L	.012 ug/L	1.4 ug/L	ug/L	ug/L	ug/L	ug/L	mg/L	mg/L	mg/L	mg/L	ug/L	ug/L	mg/L	mg/L
Jun 2017	0	5	BD	0.2	6.5	7	122	122	NR	NR	NR	NR	41	41	869	869
Jul 2017	0	5	BD	0.2	10.5	12	342	342	725	725	92.2	92.2	32	32	1,090	1,090
Aug 2017	2.33	7	BD	0.2	4.33	13	71	71	NR	NR	NR	NR	38	38	508	508
Sep 2017	0	5	BD	0.2	3	6	72	72	NR	NR	NR	NR	24	24	564	564
Oct 2017	0	5	BD	0.2	BD	5	78	78	463	463	60	60	42	42	809	809
Nov 2017	0	5	BD	0.2	4	8	105	105	NR	NR	NR	NR	32	32	896	896
Dec 2017	0	5	BD	0.2	7	8	120	120	NR	NR	NR	NR	17	17	1,710	1,710
Jan 2018	4	8	BD	0.2	BD	5	81	81	1,050	1,050	136.5	138	18	18	1,730	1,750
Feb 2018	0	5	BD	0.2	5	5	BD	50	NR	NR	NR	NR	BD	10	1,408	1,880
Mar 2018	0	5	BD	0.2	17	17	390	390	NR	NR	NR	NR	34	34	1,725	1,800
Apr 2018	0	5	BD	0.2	19.5	25	352	352	435	435	55.7	55.7	183	183	764	764
May 2018	0	5	BD	0.2	23.3	30	113	113	NR	NR	NR	NR	80	80	619	619
Jun 2018	0	5	BD	0.2	19.5	27	132	132	NR	NR	NR	NR	23	23	770	770
Jul 2018	0	5	BD	0.2	30	33	207	207	373	373	34.3	34.3	26	26	590	590
Aug 2018	2.5	5	BD	0.2	13	16	144	144	NR	NR	NR	NR	45	45	715	715
Sep 2018	0	5	BD	0.2	10.5	13	203	203	NR	NR	NR	NR	13	13	844	844
Oct 2018	0	5	BD	0.2	14.5	21	457	457	408	408	43.9	43.9	74	74	681	681
Nov 2018	0	5	BD	0.2	26.5	28	394	394	NR	NR	NR	NR	37	37	1,360	1,360
Dec 2018	0	5	0.01	0.3	27.5	34	835	835	1,020	1,020	105	105	39	39	1,610	1,610
Jan 2019	0	5	BD	0.2	19.5	21	300	300	882	882	114	114	29	29	1,580	1,580
Feb 2019	0	5	BD	0.2	15	17	330	330	NR	NR	NR	NR	21	21	1,340	1,340
Mar 2019	0	5	BD	0.2	13	17	452	452	NR	NR	NR	NR	39	39	1,650	1,650
Apr 2019	0	5	BD	0.2	8	8	281	281	278	278	32.3	32.3	393	393	484	484
May 2019	0	5	BD	0.2	7.33	10	117	117	NR	NR	NR	NR	74	74	507	507

Compliance Point 004 - A

DMR	Total Recoverable Selenium		Total Recoverable Mercury		Total Recoverable Arsenic		Total Recoverable Iron		Total Sulfate		Total Sodium		Total Recoverable Aluminum		TDS	
	30-Day Avg	Daily Max	30-Day Avg	Daily Max	30-Day Avg	Daily Max	30-Day Avg	Daily Max	30-Day Avg	Daily Max	30-Day Avg	Daily Max	30-Day Avg	Daily Max	30-Day Avg	Daily Max
	4.6 ug/L	ug/L	.012 ug/L	1.4 ug/L	ug/L	ug/L	ug/L	ug/L	mg/L	mg/L	mg/L	mg/L	ug/L	ug/L	mg/L	mg/L
Jun 2019	0	5	BD	0.2	14	17	138	138	NR	NR	NR	NR	52	52	576	576
Jul 2019	0	5	BD	0.2	8	9	414	414	217	217	18.9	18.9	180	180	409	409
Aug 2019	0	5	BD	0.2	8	8	399	399	NR	NR	NR	NR	34	34	655	655
Sep 2019	0	5	BD	0.2	7	7	554	554	NR	NR	NR	NR	63.5	92	685	685
Oct 2019	0	5	BD	0.2	6.67	9	209	209	370	370	35	35	61	61	643	643
Nov 2019	0	5	BD	0.2	6.5	8	310	310	NR	NR	NR	NR	161	161	703	703
Dec 2019	0	5	BD	0.2	6	6	129	129	NR	NR	NR	NR	44	44	834	834
Jan 2020	3.5	7	BD	0.2	7	7	275	275	758	758	71.2	71.2	27	27	1,220	1,220
Feb 2020	3.5	7	BD	0.2	7.5	8	341	341	NR	NR	NR	NR	20	20	1,810	1,810
Mar 2020	1.7	5	BD	0.2	3	6	301	301	NR	NR	NR	NR	61	61	1,270	1,270
Apr 2020	0	5	BD	0.2	3.5	7	543	543	89.1	89.1	9.99	9.99	827	827	234	234
May 2020	0	5	BD	0.2	9	13	152	152	NR	NR	NR	NR	203	203	299	299
Jun 2020	0	5	BD	0.2	11.67	15	929	929	NR	NR	NR	NR	138	138	310	310
Jul 2020	0	5	BD	0.2	18.5	37	839	839	392	392	31	31	289	289	589	589
Aug 2020	0	5	BD	0.2	5.5	11	BD	50	NR	NR	NR	NR	19	19	440	440
Sep 2020	2.5	5	BD	0.2	7	8	150	150	NR	NR	NR	NR	16	16	433	433
Oct 2020	0	5	BD	0.2	4	8	381	381	765	765	68.6	68.6	77	77	1,150	1,150
Nov 2020	0	5	BD	0.2	11.5	12	548	548	NR	NR	NR	NR	36	36	1,800	1,800
Dec 2020	4	8	BD	0.2	14.5	15	367	367	NR	NR	NR	NR	35	35	1,960	1,960
Jan 2021	0	5	BD	0.2	12.5	14	561	561	1,300	1,300	142	142	45	45	1,980	1,980
Feb 2021	0	5	BD	0.2	7.5	8	325	325	NR	NR	NR	NR	32	32	1,230	1,230
Mar 2021	0	5	BD	0.2	9	10	434	434	NR	NR	NR	NR	31	31	2,080	2,080
Apr 2021	0	5	BD	0.2	3	6	225	225	513	513	55.5	55.5	131	131	789	789
May 2021	0	5	BD	0.2	6	7	211	211	NR	NR	NR	NR	293	293	315	315

Compliance Point 004 - A

DMR	Total Recoverable Selenium		Total Recoverable Mercury		Total Recoverable Arsenic		Total Recoverable Iron		Total Sulfate		Total Sodium		Total Recoverable Aluminum		TDS	
	30-Day Avg	Daily Max	30-Day Avg	Daily Max	30-Day Avg	Daily Max	30-Day Avg	Daily Max	30-Day Avg	Daily Max	30-Day Avg	Daily Max	30-Day Avg	Daily Max	30-Day Avg	Daily Max
	4.6 ug/L	ug/L	.012 ug/L	1.4 ug/L	ug/L	ug/L	ug/L	ug/L	mg/L	mg/L	mg/L	mg/L	ug/L	ug/L	mg/L	mg/L
Jun 2021	0	5	BD	0.2	8.7	11	657	657	NR	NR	NR	NR	129	129	503	503
Jul 2021	0	5	BD	0.2	3	6	263	263	434	434	40.5	40.5	28	28	654	654
Aug 2021	0	5	BD	0.2	BD	5	79	79	NR	NR	NR	NR	14	14	488	488
Sep 2021	0	5	BD	0.2	6	7	285	285	NR	NR	NR	NR	27	27	871	871
Oct 2021	0	5	BD	0.2	10	10	222	222	954	954	86.1	86.1	25	25	1,160.5	1,380
Nov 2021	0	5	BD	0.2	14	14	189	189	NR	NR	NR	NR	86	86	1,020	1,020
Dec 2021	0	5	BD	0.2	13.67	16	323	323	NR	NR	NR	NR	59	59	1,300	1,300
Jan 2022	0	5	BD	0.2	14.5	16	175	175	1,180	1,180	128	128	43	43	1,760	1,760
Feb 2022	3	6	BD	0.2	13.5	14	163	163	NR	NR	NR	NR	34	34	1,860	1,860
Mar 2022	0	5	BD	0.2	10.5	12	213	213	737	737	79.9	79.9	179	179	1,140	1,140
Apr 2022	2.5	5	BD	0.2	14.5	20	220	220	557	557	56.6	56.6	218	218	831	831
May 2022	0	5	BD	0.2	BD	5	275	275	NR	NR	NR	NR	482	482	165	165
Jun 2022	0	5	BD	0.2	8.33	10	186	186	NR	NR	NR	NR	71	71	663	663
Jul 2022	4	8	BD	0.2	16	23	122	122	482	482	44.6	44.6	20	20	726	726
Aug 2022	3	6	BD	0.2	9.5	19	214	242	NR	NR	NR	NR	16	16	457	457
Sep 2022	BD	BD	BD	0.2	7	7	139	139	NR	NR	NR	NR	16	16	596	596
Oct 2022	BD	BD	BD	0.2	4.5	9	206	233	344	344	31.6	31.6	34	34	492	492
Nov 2022	BD	BD	BD	0.2	5	5	286	286	NR	NR	NR	NR	432	432	297	297
Dec 2022	BD	BD	BD	0.2	BD	5	131	131	NR	NR	NR	NR	108	108	303	303

Compliance Point 004 - A

DMR	Acute Ceriodaphnia	Acute Pimephales Promelas
	Daily Max	Daily Max
	pass=0;fail=1	pass=0;fail=1
Sep 2005	0	0
Dec 2005	0	0
Mar 2006	0	0
Jun 2006	0	0
Sep 2006	0	0
Dec 2006	0	0
Mar 2007	0	0
Jun 2007	0	0
Sep 2007	0	0
Dec 2007	0	0
Mar 2008	0	0
Jun 2008	0	0
Sep 2008	0	0
Dec 2008	0	0
Mar 2009	0	0
Jun 2009	0	0
Sep 2009	0	0
Dec 2009	0	0
Mar 2010	0	0
Jun 2010	0	0
Sep 2010	ND	ND
Dec 2010	0	0
Mar 2011	0	0

DMR	Acute Ceriodaphnia	Acute Pimephales Promelas
	Daily Max	Daily Max
	pass=0;fail=1	pass=0;fail=1
Jun 2011	0	0
Sep 2011	0	0
Dec 2011	0	0
Mar 2012	0	0
Jun 2012	0	0
Sep 2012	0	0
Dec 2012	0	0
Mar 2013	0	0
Jun 2013	0	0
Sep 2013	0	0
Dec 2013	0	0
Mar 2014	0	0
Jun 2014	0	0
Sep 2014	0	0
Dec 2014	0	0
Mar 2015	0	0
Jun 2015	0	0
Sep 2015	0	0
Dec 2015	NR	0
Mar 2016	0	NR
Jun 2016	NR	0
Sep 2016	0	NR
Dec 2016	NR	0

DMR	Acute Ceriodaphnia	Acute Pimephales Promelas
	Daily Max	Daily Max
	pass=0;fail=1	pass=0;fail=1
Mar 2017	0	NR
Jun 2017	NR	0
Sep 2017	0	NR
Dec 2017	NR	0
Mar 2018	0	NR
Jun 2018	NR	0
Sep 2018	0	NR
Dec 2018	NR	0
Mar 2019	0	NR
Jun 2019	NR	0
Sep 2019	0	NR
Dec 2019	NR	0
Mar 2020	0	NR
Jun 2020	NR	0
Sep 2020	0	NR
Dec 2020	NR	0
Mar 2021	0	NR
Jun 2021	NR	0
Sep 2021	0	NR
Dec 2021	NR	0
Mar 2022	0	NR
Jun 2022	NR	0
Sep 2022	0	NR
Dec 2022	NR	0

Instream Monitoring Point STR - 1

DMR	Flow rate		Water Temperature	pH		TSS	Ammonia-Nitrogen	Oil and grease visual	TPH
	30-Day Avg	Daily Max	Daily Max	Daily Max	Daily Min	Daily Max	Daily Max	Daily Max	Daily Max
	MGD	MGD	deg C	SU	SU	mg/L	mg/L	N=0;Y=1	mg/L
Jul 2005	0.15	0.15	19.7	7.58	7.58	10	0.05	0	NR
Aug 2005	0.1	0.1	12.9	7.94	7.94	10	0.05	0	NR
Sep 2005	0.06	0.06	13.1	7.92	7.92	10	0.05	0	NR
Oct 2005	0.07	0.07	6.9	7.61	7.61	10	0.05	0	NR
Nov 2005	0.08	0.08	0.3	7.22	7.22	10	0.05	0	NR
Dec 2005	0.07	0.07	0.1	7.23	7.23	10	0.05	0	NR
Jan 2006	0.14	0.14	0	7.02	7.02	10	0.05	0	NR
Feb 2006	0.14	0.14	0.9	6.94	6.94	10	0.05	0	NR
Mar 2006	0.18	0.18	1.3	7.05	7.05	10	0.05	0	NR
Apr 2006	5.28	5.28	5.3	7.17	7.17	10	0.05	0	NR
May 2006	2.28	2.28	7.5	6.92	6.92	10	0.05	0	NR
Jun 2006	0.6	0.6	14.5	7.68	7.68	10	0.05	0	NR
Jul 2006	0.2	0.2	19.4	7.91	7.91	10	0.05	0	NR
Aug 2006	0.09	0.09	12.5	7.54	7.54	10	0.05	0	NR
Sep 2006	0.11	0.11	6.5	7.55	7.55	10	0.05	0	NR
Oct 2006	0.22	0.22	1.3	6.9	6.9	10	0.05	0	NR
Nov 2006	0.24	0.24	0.8	6.95	6.95	10	0.05	0	NR
Dec 2006	0.22	0.22	0.1	7.11	7.11	10	0.05	0	NR
Jan 2007	0.18	0.18	0.1	7.25	7.25	10	0.05	0	NR
Feb 2007	0.18	0.18	0.9	7.16	7.16	10	0.05	0	NR
Mar 2007	0.58	0.58	0.5	6.6	6.6	10	0.05	0	NR
Apr 2007	5.02	5.02	2.7	6.98	6.98	10	0.05	0	NR
May 2007	2.41	2.41	8.4	7.54	7.54	10	0.05	0	NR
Jun 2007	1.57	1.57	8.1	7.28	7.28	10	0.05	0	NR
Jul 2007	0.15	0.15	16.9	7.83	7.83	10	0.05	0	NR

Instream Monitoring Point STR - 1

DMR	Flow rate		Water Temperature	pH		TSS	Ammonia-Nitrogen	Oil and grease visual	TPH
	30-Day Avg	Daily Max	Daily Max	Daily Max	Daily Min	Daily Max	Daily Max	Daily Max	Daily Max
	MGD	MGD	deg C	SU	SU	mg/L	mg/L	N=0;Y=1	mg/L
Aug 2007	0.04	0.04	15.2	7.47	7.47	10	0.05	0	NR
Sep 2007	0.2	0.2	8.4	7.28	7.28	10	0.05	0	NR
Oct 2007	0.05	0.05	2	7.58	7.58	10	0.05	0	NR
Nov 2007	0.11	0.11	0.8	7.52	7.52	10	0.05	0	NR
Dec 2007	0.11	0.11	0.2	7.19	7.19	10	0.05	0	NR
Jan 2008	0.14	0.14	0.8	6.83	6.83	10	0.05	0	NR
Feb 2008	0.14	0.14	0.1	6.95	6.95	10	0.05	0	NR
Mar 2008	0.14	0.14	0.2	7.16	7.16	10	0.05	0	NR
Apr 2008	3.35	3.35	2.3	7.14	7.14	10	0.05	0	NR
May 2008	10.72	10.72	5.6	7.35	7.35	10	0.05	0	NR
Jun 2008	2.85	2.85	8.7	7.62	7.62	10	0.05	0	NR
Jul 2008	0.36	0.36	13.9	7.76	7.76	10	0.05	0	NR
Aug 2008	0.28	0.28	12.5	7.68	7.68	10	0.05	0	NR
Sep 2008	0.17	0.17	10.5	8.06	8.06	10	0.05	0	NR
Oct 2008	0.17	0.17	2.4	7.84	7.84	10	0.05	0	NR
Nov 2008	0.87	0.87	0.2	7.33	7.33	10	0.05	0	NR
Dec 2008	0.29	0.29	-0.2	7.35	7.35	10	0.05	0	NR
Jan 2009	0.25	0.25	0.2	7.43	7.43	10	0.05	0	NR
Feb 2009	0.36	0.36	0.2	7.29	7.29	BD	BD	0	NR
Mar 2009	0.37	0.37	0	7.4	7.4	BD	BD	0	NR
Apr 2009	11.96	11.96	5.6	7.51	7.51	BD	BD	0	NR
May 2009	4.54	4.54	6.2	7.72	7.72	BD	BD	0	NR
Jun 2009	4.93	4.93	5.8	7.61	7.61	BD	BD	0	NR
Jul 2009	0.31	0.31	10.8	7.86	7.86	BD	BD	0	NR
Aug 2009	0.16	0.16	13.4	7.91	7.91	BD	BD	0	NR

Instream Monitoring Point STR - 1

DMR	Flow rate		Water Temperature	pH		TSS	Ammonia-Nitrogen	Oil and grease visual	TPH
	30-Day Avg	Daily Max	Daily Max	Daily Max	Daily Min	Daily Max	Daily Max	Daily Max	Daily Max
	MGD	MGD	deg C	SU	SU	mg/L	mg/L	N=0;Y=1	mg/L
Sep 2009	0.2	0.2	8.2	7.89	7.89	BD	BD	0	NR
Oct 2009	0.54	0.54	0.1	7.75	7.75	BD	BD	0	NR
Nov 2009	0.55	0.55	2.5	7.63	7.63	BD	BD	0	NR
Dec 2009	0.33	0.33	0.4	7.76	7.76	BD	BD	0	NR
Jan 2010	0.29	0.29	1.3	7.67	7.67	BD	BD	0	NR
Feb 2010	0.29	0.29	1.3	7.63	7.63	BD	BD	0	NR
Mar 2010	0.39	0.39	1.6	7.33	7.33	BD	BD	0	NR
Apr 2010	7.55	7.55	3.5	7.18	7.18	BD	BD	0	NR
May 2010	3.03	3.03	2	7.15	7.15	BD	BD	0	NR
Jun 2010	2.04	2.04	7.9	7.74	7.74	BD	BD	0	NR
Jul 2010	0.29	0.29	11.5	7.59	7.59	BD	BD	0	NR
Aug 2010	0.24	0.24	13.1	7.98	7.98	BD	BD	0	NR
Sep 2010	ND	ND	ND	ND	ND	ND	ND	ND	ND
Oct 2010	0.22	0.22	3.1	7.33	7.33	10	0.05	0	NR
Nov 2010	0.13	0.13	1.2	6.84	6.84	BD	BD	0	NR
Dec 2010	0.25	0.25	0.7	7.14	7.14	BD	BD	0	NR
Jan 2011	0.14	0.14	0.3	6.92	6.92	BD	BD	0	NR
Feb 2011	0.14	0.14	0.7	7.35	7.35	BD	BD	0	NR
Mar 2011	0.47	0.47	0.8	7.75	7.75	BD	BD	0	NR
Apr 2011	2.64	2.64	3.3	7.73	7.73	BD	BD	0	NR
May 2011	9.03	9.03	4.9	7.31	7.31	BD	BD	0	NR
Jun 2011	2.37	2.37	6.7	7.75	7.75	BD	BD	0	NR
Jul 2011	0.37	0.37	15.3	7.79	7.79	BD	BD	0	NR
Aug 2011	0.25	0.25	13.9	7.96	7.96	BD	BD	0	NR
Sep 2011	0.1	0.1	12.2	7.99	7.99	BD	BD	0	NR

Instream Monitoring Point STR - 1

DMR	Flow rate		Water Temperature	pH		TSS	Ammonia-Nitrogen	Oil and grease visual	TPH
	30-Day Avg	Daily Max	Daily Max	Daily Max	Daily Min	Daily Max	Daily Max	Daily Max	Daily Max
	MGD	MGD	deg C	SU	SU	mg/L	mg/L	N=0;Y=1	mg/L
Oct 2011	0.12	0.12	7	7.84	7.84	BD	BD	0	NR
Nov 2011	0.28	0.32	0.2	8.22	8.1	BD	BD	0	NR
Dec 2011	0.1	0.1	0.2	7.47	7.47	BD	BD	0	NR
Jan 2012	0.15	0.15	1	7.42	7.42	BD	BD	0	NR
Feb 2012	0.11	0.11	1.9	7.38	7.38	BD	BD	0	NR
Mar 2012	0.3	0.3	0.5	7.45	7.45	BD	BD	0	NR
Apr 2012	0.51	0.51	3.5	7.75	7.75	BD	BD	0	NR
May 2012	0.93	0.93	5.6	7.68	7.68	BD	BD	0	NR
Jun 2012	0.23	0.23	13.8	7.83	7.83	BD	BD	0	NR
Jul 2012	0.08	0.08	17.5	7.86	7.86	BD	BD	0	NR
Aug 2012	0.14	0.14	13.6	7.88	7.88	BD	BD	0	NR
Sep 2012	0.1	0.17	13	8.03	7.86	BD	BD	0	NR
Oct 2012	0.48	0.05	7.4	8.02	8.02	BD	BD	0	NR
Nov 2012	0.07	0.07	2	7.57	7.57	BD	BD	0	NR
Dec 2012	0.05	0.05	0.6	7.66	7.66	BD	BD	0	NR
Jan 2013	0.06	0.06	0.3	7.65	7.65	BD	BD	0	NR
Feb 2013	0.06	0.06	1.2	7.34	7.34	BD	BD	0	NR
Mar 2013	0.08	0.08	1.4	7.7	7.7	BD	BD	0	NR
Apr 2013	0.3	0.3	0.7	7.52	7.52	BD	BD	0	NR
May 2013	1.36	1.36	11.7	7.72	7.72	BD	BD	0	NR
Jun 2013	1.8	1.8	11.4	7.67	7.67	BD	BD	0	NR
Jul 2013	0.3	0.3	13	7.85	7.85	BD	BD	0	NR
Aug 2013	0.19	0.19	16	7.99	7.99	10	0.05	0	NR
Sep 2013	0.11	0.11	12.7	8.04	8.04	10	0.05	0	NR

Instream Monitoring Point STR - 1

DMR	Flow rate		Water Temperature	pH		TSS	Ammonia-Nitrogen	Oil and grease visual	TPH
	30-Day Avg	Daily Max	Daily Max	Daily Max	Daily Min	Daily Max	Daily Max	Daily Max	Daily Max
	MGD	MGD	deg C	SU	SU	mg/L	mg/L	N=0;Y=1	mg/L
Oct 2013	5.17	5.17	5.7	7.44	7.44	10	0.05	0	NR
Nov 2013	1.64	1.64	3.6	7.67	7.67	10	0.05	0	NR
Dec 2013	0.31	0.31	0.9	7.65	7.65	10	0.05	0	NR
Jan 2014	0.17	0.17	0.5	7.72	7.72	10	0.05	0	NR
Feb 2014	0.32	0.32	0.5	7.95	7.95	10	0.05	0	NR
Mar 2014	0.69	0.69	0.4	7.92	7.92	10	0.05	0	NR
Apr 2014	12.54	12.54	5.3	7.13	7.13	10	0.05	0	NR
May 2014	8.1	8.1	5.3	7.45	7.45	10	0.05	0	NR
Jun 2014	0.98	0.98	10.9	7.6	7.6	10	0.05	0	NR
Jul 2014	0.36	0.36	14.2	7.95	7.95	10	0.05	0	NR
Aug 2014	0.15	0.15	16.2	7.95	7.95	10	0.05	0	NR
Sep 2014	0.11	0.11	11.1	7.98	7.98	10	0.05	0	NR
Oct 2014	0.28	0.28	7	7.43	7.43	10	0.05	0	NR
Nov 2014	0.22	0.22	0.2	7.61	7.61	10	0.05	0	NR
Dec 2014	0.13	0.13	0.5	7.61	7.61	10	0.05	0	NR
Jan 2015	0.12	0.12	0.2	7.71	7.71	10	0.05	0	NR
Feb 2015	0.74	0.74	1.5	7.2	7.2	10	0.05	0	NR
Mar 2015	0.75	0.75	1.6	7.3	7.3	10	0.05	0	NR
Apr 2015	1.18	1.18	5	7.35	7.35	10	0.05	0	NR
May 2015	11.31	11.31	6.3	7.57	7.57	10	0.05	0	NR
Jun 2015	1.98	1.98	10.9	7.39	7.39	10	0.05	0	NR
Jul 2015	0.72	0.72	13.8	7.95	7.95	10	0.05	0	NR
Aug 2015	0.13	0.13	16.5	7.76	7.76	10	0.05	0	NR
Sep 2015	0.21	0.21	11	7.65	7.65	10	0.05	0	NR
Oct 2015	0.15	0.15	7.3	7.79	7.79	10	0.05	0	NR

Instream Monitoring Point STR - 1

DMR	Flow rate		Water Temperature	pH		TSS	Ammonia-Nitrogen	Oil and grease visual	TPH
	30-Day Avg	Daily Max	Daily Max	Daily Max	Daily Min	Daily Max	Daily Max	Daily Max	Daily Max
	MGD	MGD	deg C	SU	SU	mg/L	mg/L	N=0;Y=1	mg/L
Nov 2015	0.17	0.17	0.2	7.67	7.67	10	0.05	0	NR
Dec 2015	0.18	0.18	0.3	7.43	7.43	10	0.05	0	NR
Jan 2016	0.13	0.13	0.6	7.89	7.89	10	0.05	0	NR
Feb 2016	0.2	0.2	0.4	7.54	7.54	10	0.05	0	NR
Mar 2016	0.62	0.62	1.8	7.38	7.38	10	0.05	0	NR
Apr 2016	2.13	2.13	2.7	7.43	7.43	10	0.05	0	NR
May 2016	0.76	0.76	9.2	7.62	7.62	10	0.05	0	NR
Jun 2016	0.24	0.24	15.9	8.01	8.01	10	0.05	0	NR
Jul 2016	0.11	0.11	13.4	8.02	8.02	10	0.05	0	NR
Aug 2016	0.12	0.12	11.4	8.06	8.06	10	0.05	0	NR
Sep 2016	0.13	0.13	9.6	7.59	7.59	10	0.05	0	NR
Oct 2016	0.1	0.1	5.4	8	8	10	0.05	0	NR
Nov 2016	0.08	0.08	4.1	8.08	8.08	10	0.05	0	NR
Dec 2016	0.08	0.08	7.91	7.91	7.91	10	0.05	0	NR
Jan 2017	0.08	0.08	0.3	7.91	7.91	10	0.05	0	NR
Feb 2017	0.11	0.11	1.1	7.79	7.79	10	0.05	0	NR
Mar 2017	0.19	0.19	0.4	7.89	7.89	10	0.05	0	NR
Apr 2017	0.28	0.28	0.7	7.81	7.81	10	0.05	0	NR
May 2017	0.91	0.91	5.4	7.56	7.56	10	0.05	0	NR
Jun 2017	0.59	0.59	11.1	7.71	7.71	10	0.05	0	NR
Jul 2017	0.13	0.13	16.5	7.81	7.81	10	0.05	0	NR
Aug 2017	0.11	0.11	15.2	7.96	7.96	10	0.05	0	NR
Sep 2017	0.1	0.1	10.3	7.97	7.97	10	0.05	0	NR
Oct 2017	0.1	0.1	3.6	7.76	7.76	10	0.05	0	NR
Nov 2017	0.07	0.07	0.5	7.87	7.87	10	0.05	0	NR

Instream Monitoring Point STR - 1

DMR	Flow rate		Water Temperature	pH		TSS	Ammonia-Nitrogen	Oil and grease visual	TPH
	30-Day Avg	Daily Max	Daily Max	Daily Max	Daily Min	Daily Max	Daily Max	Daily Max	Daily Max
	MGD	MGD	deg C	SU	SU	mg/L	mg/L	N=0;Y=1	mg/L
Dec 2017	0.08	0.08	0.6	7.83	7.83	10	0.05	0	NR
Jan 2018	0.07	0.07	0.8	7.82	7.82	10	0.05	0	NR
Feb 2018	0.09	0.09	0.6	7.88	7.88	10	0.05	0	NR
Mar 2018	0.13	0.13	1	7.76	7.76	10	0.05	0	NR
Apr 2018	1.6	1.6	3.2	7.74	7.74	10	0.05	0	NR
May 2018	1.59	1.59	10.1	7.89	7.89	10	0.05	0	NR
Jun 2018	0.3	0.3	13.5	7.9	7.9	10	0.05	0	NR
Jul 2018	1.19	1.19	13.6	7.75	7.75	10	0.05	0	NR
Aug 2018	0.21	0.21	15.4	7.81	7.81	10	0.05	0	NR
Sep 2018	0.1	0.1	14.8	8	8	10	0.05	0	NR
Oct 2018	0.15	0.15	3.4	7.75	7.75	10	0.05	0	NR
Nov 2018	0.13	0.13	0.2	7.64	7.64	10	0.05	0	NR
Dec 2018	0.09	0.09	0.1	7.63	7.63	10	0.05	0	NR
Jan 2019	0.14	0.14	0.3	7.66	7.66	10	0.05	0	NR
Feb 2019	0.15	0.15	0.2	7.32	7.32	10	0.05	0	NR
Mar 2019	0.07	0.07	0.3	7.5	7.5	10	0.05	0	NR
Apr 2019	8.45	8.45	5.2	7.02	7.02	10	0.05	0	NR
May 2019	2.87	2.87	4.1	7.25	7.25	10	0.05	0	NR
Jun 2019	1.04	1.04	10.7	7.66	7.66	10	0.05	0	NR
Jul 2019	0.6	0.6	14.5	7.61	7.61	10	0.05	0	NR
Aug 2019	0.19	0.19	12.3	7.61	7.61	10	0.05	0	NR
Sep 2019	0.13	0.13	13.1	7.69	7.69	10	0.05	0	NR
Oct 2019	0.18	0.18	3.6	7.6	7.6	10	0.05	0	NR
Nov 2019	0.91	0.91	1.5	7.45	7.45	10	0.05	0	NR
Dec 2019	0.19	0.19	0.7	7.39	7.39	10	0.05	0	NR

Instream Monitoring Point STR - 1

DMR	Flow rate		Water Temperature	pH		TSS	Ammonia-Nitrogen	Oil and grease visual	TPH
	30-Day Avg	Daily Max	Daily Max	Daily Max	Daily Min	Daily Max	Daily Max	Daily Max	Daily Max
	MGD	MGD	deg C	SU	SU	mg/L	mg/L	N=0;Y=1	mg/L
Jan 2020	0.15	0.15	0.2	7.46	7.46	10	0.05	0	NR
Feb 2020	0.11	0.11	0.5	7.44	7.44	10	0.05	0	NR
Mar 2020	0.73	0.73	0.9	7.22	7.22	10	0.05	0	NR
Apr 2020	7.28	7.28	5.3	7.26	7.26	10	0.05	0	NR
May 2020	3.02	3.02	8.2	7.4	7.4	10	0.05	0	NR
Jun 2020	0.34	0.34	12.8	7.58	7.58	10	0.05	0	NR
Jul 2020	0.28	0.28	11.2	7.7	7.7	10	0.05	0	NR
Aug 2020	0.12	0.12	13.3	7.57	7.57	10	0.05	0	NR
Sep 2020	0.1	0.1	11	7.58	7.58	10	0.05	0	NR
Oct 2020	0.06	0.06	5.2	7.65	7.65	10	0.05	0	NR
Nov 2020	0.05	0.05	0	7.43	7.43	10	0.05	0	NR
Dec 2020	FR	FR	0.2	7.23	7.23	10	0.05	0	NR
Jan 2021	FR	FR	0.3	7.32	7.32	10	0.05	0	NR
Feb 2021	FR	FR	0.2	7.44	7.44	10	0.05	0	NR
Mar 2021	FR	FR	1.5	7.3	7.3	10	0.05	0	NR
Apr 2021	0.86	0.86	5.3	7.32	7.32	10	0.05	0	NR
May 2021	0.59	0.59	8.1	7.44	7.44	10	0.05	0	NR
Jun 2021	0.2	0.2	14.3	7.25	7.25	10	0.05	0	NR
Jul 2021	0.05	0.05	15.3	7.54	7.54	10	0.05	0	NR
Aug 2021	0.05	0.05	19	7.58	7.58	10	0.05	0	NR
Sep 2021	0.06	0.06	11	7.71	7.71	10	0.05	0	NR
Oct 2021	0.07	0.07	6.1	7.53	7.53	10	0.05	0	NR
Nov 2021	0.09	0.09	0.2	7.43	7.43	10	0.05	0	NR
Dec 2021	0.08	0.08	0.1	7.39	7.39	10	0.05	0	NR
Jan 2022	0.05	0.05	0.2	7.12	7.12	10	0.05	0	NR

Instream Monitoring Point STR - 1

DMR	Flow rate		Water Temperature	pH		TSS	Ammonia-Nitrogen	Oil and grease visual	TPH
	30-Day Avg	Daily Max	Daily Max	Daily Max	Daily Min	Daily Max	Daily Max	Daily Max	Daily Max
	MGD	MGD	deg C	SU	SU	mg/L	mg/L	N=0;Y=1	mg/L
Feb 2022	0.03	0.03	0.1	7.15	7.15	10	0.05	0	NR
Mar 2022	0.08	0.08	0.1	7.31	7.31	10	0.05	0	NR
Apr 2022	0.24	0.24	0.6	7.07	7.07	10	0.05	0	NR
May 2022	1.1	1.1	8.7	7.14	7.14	10	0.05	0	NR
Jun 2022	0.46	0.46	13.2	7.23	7.23	10	0.05	0	NR
Jul 2022	0.13	0.13	17.9	7.5	7.5	10	0.05	0	NR
Aug 2022	0.03	0.03	14	7.72	7.72	10	0.05	0	NR
Sep 2022	0.07	0.07	14.3	7.65	7.65	10	0.05	0	NR
Oct 2022	0.07	0.07	9.8	7.08	7.08	10	0.05	0	NR
Nov 2022	EC	EC	EC	EC	EC	EC	EC	EC	EC
Dec 2022	EC	EC	EC	EC	EC	EC	EC	EC	EC

Instream Monitoring Point STR - 1

DMR	Total Recoverable Copper	WAD Cyanide	Total Recoverable Chromium	Nitrate-Nitrogen	Total Recoverable Nickel	Total Hardness	Total Recoverable Lead	Total Recoverable Silver
	Daily Max	Daily Max	Daily Max	Daily Max	Daily Max	Daily Max	Daily Max	Daily Max
	ug/L	mg/L	ug/L	mg/L	ug/L	mg/L	ug/L	ug/L
Jul 2005	5	10	1	0.72	5	78.2	1	1
Aug 2005	5	10	1	13.5	5	135	1	1
Sep 2005	5	10	1	7.3	5	121	1	1
Oct 2005	5	10	1	1.03	5	95.1	1	1
Nov 2005	5	10	1	0.27	5	89.6	1	1
Dec 2005	5	10	1	0.37	5	93.5	1	1

Instream Monitoring Point STR - 1

DMR	Total Recoverable Copper	WAD Cyanide	Total Recoverable Chromium	Nitrate-Nitrogen	Total Recoverable Nickel	Total Hardness	Total Recoverable Lead	Total Recoverable Silver
	Daily Max	Daily Max	Daily Max	Daily Max	Daily Max	Daily Max	Daily Max	Daily Max
	ug/L	mg/L	ug/L	mg/L	ug/L	mg/L	ug/L	ug/L
Jan 2006	5	10	1	0.27	5	87.1	1	1
Feb 2006	5	10	1	0.28	5	91.4	1	1
Mar 2006	5	10	1	0.22	5	67.6	1	1
Apr 2006	5	10	1	0.5	5	26.9	1	1
May 2006	5	10	1	1.04	5	38.6	1	1
Jun 2006	5	10	1	0.89	5	55.1	1	1
Jul 2006	5	10	1	0.62	5	84.1	1	1
Aug 2006	5	10	1	0.42	5	102	1	1
Sep 2006	5	10	1	0.6	5	96.1	1	1
Oct 2006	5	10	1	1.32	5	74.6	1	1
Nov 2006	5	10	1	1.11	5	65	1	1
Dec 2006	5	10	1	0.7	5	71.6	1	1
Jan 2007	5	10	0.5	0.3	5	90.85	1	1
Feb 2007	5	10	1	0.34	5	84.5	1	1
Mar 2007	5	10	1	1.89	5	55.7	1	1
Apr 2007	5	10	2	0.27	5	25.6	1	1
May 2007	5	10	1	0.48	5	33.6	1	1
Jun 2007	5	10	1	1.17	5	48.4	1	1
Jul 2007	5	10	1	0.68	5	77.3	1	1
Aug 2007	5	10	1	0.51	5	90.4	1	1
Sep 2007	5	10	1	0.72	5	88.9	1	1
Oct 2007	5	10	1	0.2	5	85.7	1	1
Nov 2007	5	10	1	0.21	5	84.5	1	1
Dec 2007	5	10	1	0.24	5	83	1	1
Jan 2008	5	10	1	0.21	5	72.5	1	1

Instream Monitoring Point STR - 1

DMR	Total Recoverable Copper	WAD Cyanide	Total Recoverable Chromium	Nitrate-Nitrogen	Total Recoverable Nickel	Total Hardness	Total Recoverable Lead	Total Recoverable Silver
	Daily Max	Daily Max	Daily Max	Daily Max	Daily Max	Daily Max	Daily Max	Daily Max
	ug/L	mg/L	ug/L	mg/L	ug/L	mg/L	ug/L	ug/L
Feb 2008	5	10	1	0.28	5	82.4	1	1
Mar 2008	5	10	1	0.26	5	76.6	1	1
Apr 2008	23	10	4	0.91	5	34.2	3	1
May 2008	5	10	1.05	0.25	5	21.4	1.11	1
Jun 2008	5	10	1	0.79	5	85.8	1	1
Jul 2008	5	10	1	0.96	5	65.4	1	1
Aug 2008	5	BD	1	1.32	5	83.6	1	1
Sep 2008	5	BD	1	0.43	5	75.8	1	1
Oct 2008	5	BD	1	0.29	5	89	1	1
Nov 2008	5	BD	1	0.32	5	43.6	1	1
Dec 2008	5	BD	1	0.41	5	63.5	1	1
Jan 2009	5	BD	1	0.21	5	62.3	1	1
Feb 2009	BD	BD	BD	0.28	BD	67.6	BD	BD
Mar 2009	BD	BD	BD	0.89	BD	49	BD	BD
Apr 2009	BD	BD	2	0.27	BD	33.7	1	BD
May 2009	BD	BD	1	0.12	BD	30.5	BD	BD
Jun 2009	BD	BD	2	0.38	BD	29.8	1	BD
Jul 2009	BD	BD	BD	0.82	BD	67.5	BD	BD
Aug 2009	BD	BD	BD	0.78	BD	81.3	BD	BD
Sep 2009	BD	BD	BD	1.78	BD	115	BD	BD
Oct 2009	BD	BD	BD	1.22	8	151	BD	BD
Nov 2009	BD	BD	BD	1.24	BD	62	BD	BD
Dec 2009	BD	BD	BD	0.68	BD	78.9	BD	BD
Jan 2010	BD	BD	BD	0.49	BD	75	BD	BD
Feb 2010	BD	BD	BD	0.42	BD	82.3	BD	BD

Instream Monitoring Point STR - 1

DMR	Total Recoverable Copper	WAD Cyanide	Total Recoverable Chromium	Nitrate-Nitrogen	Total Recoverable Nickel	Total Hardness	Total Recoverable Lead	Total Recoverable Silver
	Daily Max	Daily Max	Daily Max	Daily Max	Daily Max	Daily Max	Daily Max	Daily Max
	ug/L	mg/L	ug/L	mg/L	ug/L	mg/L	ug/L	ug/L
Mar 2010	BD	BD	BD	0.77	BD	53.5	BD	BD
Apr 2010	BD	BD	2	0.46	BD	26	2	BD
May 2010	BD	BD	2	0.39	BD	31.8	1	BD
Jun 2010	BD	BD	BD	1.2	BD	43.5	BD	BD
Jul 2010	BD	BD	BD	0.76	BD	65.7	BD	BD
Aug 2010	BD	BD	BD	1.64	BD	104	BD	BD
Sep 2010	ND	ND	ND	ND	ND	ND	ND	ND
Oct 2010	5	10	1	1.4	5	70.8	1	1
Nov 2010	BD	BD	BD	0.86	7	95.1	BD	BD
Dec 2010	BD	BD	BD	0.54	BD	73.5	BD	BD
Jan 2011	BD	BD	BD	0.35	BD	70.6	BD	BD
Feb 2011	10	BD	BD	5.13	29	188	BD	4
Mar 2011	BD	BD	1	1.06	5	59.4	1	BD
Apr 2011	BD	BD	2	0.62	BD	53.7	1	BD
May 2011	BD	BD	2	0.61	BD	29.9	2	BD
Jun 2011	BD	BD	BD	0.65	BD	82.5	BD	BD
Jul 2011	BD	BD	BD	0.65	BD	74.7	BD	BD
Aug 2011	BD	BD	BD	4.37	BD	111	BD	BD
Sep 2011	BD	BD	BD	0.46	BD	87.7	BD	BD
Oct 2011	BD	BD	BD	0.5	BD	88.9	BD	BD
Nov 2011	7	BD	1	16	34	239	BD	BD
Dec 2011	BD	BD	BD	1.34	5	90.7	BD	BD
Jan 2012	BD	BD	BD	0.72	BD	84.3	BD	BD
Feb 2012	BD	BD	BD	0.47	BD	86	BD	BD

Instream Monitoring Point STR - 1

DMR	Total Recoverable Copper	WAD Cyanide	Total Recoverable Chromium	Nitrate-Nitrogen	Total Recoverable Nickel	Total Hardness	Total Recoverable Lead	Total Recoverable Silver
	Daily Max	Daily Max	Daily Max	Daily Max	Daily Max	Daily Max	Daily Max	Daily Max
	ug/L	mg/L	ug/L	mg/L	ug/L	mg/L	ug/L	ug/L
Mar 2012	BD	BD	BD	0.54	BD	75.1	BD	BD
Apr 2012	BD	BD	BD	1.35	BD	77.3	BD	BD
May 2012	BD	BD	1	0.68	BD	46	BD	BD
Jun 2012	BD	BD	BD	0.5	BD	73.2	BD	BD
Jul 2012	BD	BD	BD	0.16	BD	103	BD	BD
Aug 2012	BD	BD	BD	0.27	BD	90.1	BD	BD
Sep 2012	6	BD	BD	18.4	18	282	BD	BD
Oct 2012	BD	BD	BD	6.73	10	192	BD	BD
Nov 2012	BD	BD	BD	0.23	BD	107	BD	BD
Dec 2012	BD	BD	BD	0.29	BD	121	BD	BD
Jan 2013	BD	BD	BD	0.33	BD	106	BD	BD
Feb 2013	BD	BD	BD	0.27	BD	109	BD	BD
Mar 2013	BD	BD	BD	0.31	BD	101	BD	BD
Apr 2013	BD	BD	BD	1	BD	68	BD	BD
May 2013	BD	BD	1	0.51	BD	38.7	BD	BD
Jun 2013	BD	BD	1	0.52	BD	45.1	BD	BD
Jul 2013	BD	BD	BD	0.4	BD	72.5	BD	BD
Aug 2013	5	0.01	1	0.77	5	84.1	1	1
Sep 2013	5	0.01	1	0.4	5	98.9	1	1
Oct 2013	5	0.01	1	0.5	5	34.1	1	1
Nov 2013	5	0.01	1	0.78	5	43.8	1	1
Dec 2013	5	0.01	1	0.68	5	59.9	1	1
Jan 2014	5	0.01	1	0.67	5	74.6	1	1
Feb 2014	7	0.01	1	7.1	11	179	1	1
Mar 2014	5	0.01	1	0.66	5	49.7	1	1

Instream Monitoring Point STR - 1

DMR	Total Recoverable Copper	WAD Cyanide	Total Recoverable Chromium	Nitrate-Nitrogen	Total Recoverable Nickel	Total Hardness	Total Recoverable Lead	Total Recoverable Silver
	Daily Max	Daily Max	Daily Max	Daily Max	Daily Max	Daily Max	Daily Max	Daily Max
	ug/L	mg/L	ug/L	mg/L	ug/L	mg/L	ug/L	ug/L
Apr 2014	7	0.01	1	0.36	10	24.9	2	1
May 2014	5	0.01	1	0.27	5	25.4	1	1
Jun 2014	5	0.01	1	0.47	5	47.4	1	1
Jul 2014	5	0.01	1	0.53	5	65.2	1	1
Aug 2014	5	0.01	1	0.62	5	80.2	1	1
Sep 2014	5	0.01	1	0.43	5	92.1	1	1
Oct 2014	5	0.01	1	0.85	5	71	1	1
Nov 2014	5	0.01	1	0.71	5	80.7	1	1
Dec 2014	5	0.01	1	0.57	5	79.3	1	1
Jan 2015	5	0.01	1	0.63	5	77.8	1	1
Feb 2015	5	0.01	2	0.64	5	46.1	2	1
Mar 2015	5	0.01	1	0.58	5	47.6	3	1
Apr 2015	5	0.01	2	0.26	5	38.4	1	1
May 2015	5	0.01	2	0.25	5	26.1	3	1
Jun 2015	5	0.01	1	0.36	5	40.6	1	1
Jul 2015	5	0.01	1	0.49	5	57.9	1	1
Aug 2015	5	0.01	1	0.39	5	78.8	1	1
Sep 2015	5	0.01	1	0.35	5	79.5	1	1
Oct 2015	5	0.01	1	0.44	5	89.6	1	1
Nov 2015	5	0.01	1	0.57	5	89	1	1
Dec 2015	5	0.01	1	0.42	5	84	1	1
Jan 2016	5	0.01	1	0.47	5	94.4	1	1
Feb 2016	5	0.01	1	0.27	5	60.3	1	1
Mar 2016	5	0.01	2	0.62	5	50.7	2	1
Apr 2016	5	0.01	1	0.28	5	32.9	1	1

Instream Monitoring Point STR - 1

DMR	Total Recoverable Copper	WAD Cyanide	Total Recoverable Chromium	Nitrate-Nitrogen	Total Recoverable Nickel	Total Hardness	Total Recoverable Lead	Total Recoverable Silver
	Daily Max	Daily Max	Daily Max	Daily Max	Daily Max	Daily Max	Daily Max	Daily Max
	ug/L	mg/L	ug/L	mg/L	ug/L	mg/L	ug/L	ug/L
May 2016	5	0.01	1	0.34	5	50.3	1	1
Jun 2016	5	0.01	1	0.46	5	71.9	1	1
Jul 2016	5	0.01	1	0.24	5	89.3	1	1
Aug 2016	5	0.01	1	0.2	5	94	1	1
Sep 2016	5	0.01	1	0.14	5	98.2	1	1
Oct 2016	5	0.01	1	0.15	5	102	1	1
Nov 2016	5	0.01	1	0.31	5	101	1	1
Dec 2016	5	0.01	1	0.42	5	97.4	1	1
Jan 2017	5	0.01	1	0.44	5	102	1	1
Feb 2017	5	0.01	1	0.41	5	99.5	1	1
Mar 2017	5	0.01	1	0.45	5	86.6	1	1
Apr 2017	5	0.01	1	0.4	5	55.2	1	1
May 2017	5	0.01	1	0.48	5	45.4	1	1
Jun 2017	5	0.01	1	0.19	5	45.3	1	1
Jul 2017	5	0.01	1	0.3	5	80.4	1	1
Aug 2017	5	0.01	1	0.21	5	103	1	1
Sep 2017	5	0.01	1	0.14	5	107	1	1
Oct 2017	5	0.01	1	0.18	5	103	1	1
Nov 2017	5	0.01	1	0.31	5	101	1	1
Dec 2017	5	0.01	1	0.37	5	103	1	1
Jan 2018	5	0.01	1	0.39	5	100	1	1
Feb 2018	5	0.01	1	0.45	5	103	1	1
Mar 2018	5	0.01	1	0.42	5	85.1	1	1
Apr 2018	5	0.01	3	0.65	5	36.7	2	1
May 2018	5	0.01	2	0.21	5	33.5	1	1

Instream Monitoring Point STR - 1

DMR	Total Recoverable Copper	WAD Cyanide	Total Recoverable Chromium	Nitrate-Nitrogen	Total Recoverable Nickel	Total Hardness	Total Recoverable Lead	Total Recoverable Silver
	Daily Max	Daily Max	Daily Max	Daily Max	Daily Max	Daily Max	Daily Max	Daily Max
	ug/L	mg/L	ug/L	mg/L	ug/L	mg/L	ug/L	ug/L
Jun 2018	5	0.01	1	0.35	5	55.9	1	1
Jul 2018	5	0.01	2	0.41	5	48.1	1	1
Aug 2018	5	0.01	1	0.52	5	64.6	1	1
Sep 2018	5	0.01	1	0.36	5	88.3	1	1
Oct 2018	5	0.01	1	0.41	5	85.1	1	1
Nov 2018	5	0.01	1	0.61	5	79.5	1	1
Dec 2018	5	0.01	1	0.58	5	88.5	1	1
Jan 2019	5	0.01	1	0.48	5	88.4	1	1
Feb 2019	5	0.01	1	0.43	5	91.2	1	1
Mar 2019	5	0.01	1	0.42	5	95.5	1	1
Apr 2019	5	0.01	2	0.17	5	24.7	2	1
May 2019	5	0.01	1	0.39	5	32.2	1	1
Jun 2019	5	0.01	1	0.38	5	42.2	1	1
Jul 2019	5	0.01	1	0.63	5	60	1	1
Aug 2019	5	0.01	1	0.47	5	72.5	1	1
Sep 2019	5	0.01	1	0.37	5	86.6	1	1
Oct 2019	5	0.01	1	0.49	5	74.7	1	1
Nov 2019	5	0.01	4	0.79	5	45.5	3	2
Dec 2019	5	0.01	7	0.46	5	59.5	1	1
Jan 2020	5	0.01	1	0.44	5	75.2	1	1
Feb 2020	5	0.01	1	0.54	5	76.5	1	1
Mar 2020	5	0.01	3	0.51	5	41.5	2	1
Apr 2020	5	0.01	5	0.26	5	29	4	1
May 2020	5	0.01	2	0.27	5	27.9	1	1
Jun 2020	5	0.01	1	0.3	5	66	1	1

Instream Monitoring Point STR - 1

DMR	Total Recoverable Copper	WAD Cyanide	Total Recoverable Chromium	Nitrate-Nitrogen	Total Recoverable Nickel	Total Hardness	Total Recoverable Lead	Total Recoverable Silver
	Daily Max	Daily Max	Daily Max	Daily Max	Daily Max	Daily Max	Daily Max	Daily Max
	ug/L	mg/L	ug/L	mg/L	ug/L	mg/L	ug/L	ug/L
Jul 2020	5	0.01	1	1.11	5	79.5	1	1
Aug 2020	5	0.01	1	1.61	5	102	1	1
Sep 2020	5	0.01	1	0.39	5	99.4	1	1
Oct 2020	5	0.01	1	0.19	5	101	1	1
Nov 2020	5	0.01	1	0.71	5	108	1	1
Dec 2020	5	0.01	1	0.54	5	98.3	1	1
Jan 2021	5	0.01	1	0.53	5	99.8	1	1
Feb 2021	5	0.01	1	0.62	5	94.7	1	1
Mar 2021	5	0.01	1	0.51	5	94.4	1	1
Apr 2021	5	0.01	2	0.69	5	41.4	2	1
May 2021	5	0.01	1	0.19	5	37.5	1	1
Jun 2021	5	0.01	1	0.31	9	63.8	1	1
Jul 2021	5	0.01	1	0.26	5	87.3	1	1
Aug 2021	5	0.01	1	0.13	5	111	1	1
Sep 2021	5	0.01	1	0.24	5	109	1	1
Oct 2021	5	0.01	1	0.34	5	106	1	1
Nov 2021	5	0.01	1	0.76	5	81	1	1
Dec 2021	5	0.01	1	0.63	5	97.1	1	1
Jan 2022	5	0.01	1	0.45	5	97.2	1	1
Feb 2022	5	0.01	1	0.48	5	101	1	1
Mar 2022	5	0.01	1	0.57	5	75.2	1	1
Apr 2022	5	0.01	1	0.61	5	59	1	1
May 2022	5	0.01	1	0.17	5	33.1	1	1
Jun 2022	5	0.01	1	0.25	5	52.4	1	1
Jul 2022	5	0.01	1	0.27	5	70.3	1	1

Instream Monitoring Point STR - 1

DMR	Total Recoverable Copper	WAD Cyanide	Total Recoverable Chromium	Nitrate-Nitrogen	Total Recoverable Nickel	Total Hardness	Total Recoverable Lead	Total Recoverable Silver
	Daily Max	Daily Max	Daily Max	Daily Max	Daily Max	Daily Max	Daily Max	Daily Max
	ug/L	mg/L	ug/L	mg/L	ug/L	mg/L	ug/L	ug/L
Aug 2022	5	0.01	1	0.24	5	102	1	1
Sep 2022	5	0.01	1	0.22	5	118	1	1
Oct 2022	5	0.01	1	0.16	5	110	1	1
Nov 2022	EC	EC	EC	EC	EC	EC	EC	EC
Dec 2022	EC	EC	EC	EC	EC	EC	EC	EC

Instream Monitoring Point STR - 1

DMR	Total Recoverable Zinc	Total Recoverable Cadmium	Total Recoverable Selenium	Total Recoverable Mercury	Total Recoverable Arsenic	Total Recoverable Iron	Total Recoverable Aluminum	TDS
	Daily Max	Daily Max	Daily Max	Daily Max	Daily Max	Daily Max	Daily Max	Daily Max
	ug/L	ug/L	ug/L	ug/L	ug/L	ug/L	ug/L	mg/L
Jul 2005	50	1	5	0.2	5	71	61	153
Aug 2005	71	1	5	0.2	5	50	26	243
Sep 2005	50	1	5	0.2	5	50	42	197
Oct 2005	50	1	5	0.2	5	50	50	148
Nov 2005	50	1	5	0.2	5	50	65	140
Dec 2005	50	1	5	0.2	5	74	58	149
Jan 2006	50	1	5	0.2	5	50	92	148
Feb 2006	91	1	5	0.2	5	120	59	142
Mar 2006	50	1	5	0.2	5	94	179	116
Apr 2006	50	1	5	0.2	7	928	1,820	64
May 2006	50	1	5	0.2	5	317	532	86
Jun 2006	50	1	5	0.2	5	109	133	93

Instream Monitoring Point STR - 1

DMR	Total Recoverable Zinc	Total Recoverable Cadmium	Total Recoverable Selenium	Total Recoverable Mercury	Total Recoverable Arsenic	Total Recoverable Iron	Total Recoverable Aluminum	TDS
	Daily Max	Daily Max	Daily Max	Daily Max	Daily Max	Daily Max	Daily Max	Daily Max
	ug/L	ug/L	ug/L	ug/L	ug/L	ug/L	ug/L	mg/L
Jul 2006	50	1	5	0.2	5	83	72	137
Aug 2006	50	1	BD	BD	5	50	39	164
Sep 2006	55	1	BD	BD	5	60	177	147
Oct 2006	50	1	BD	BD	5	54	82	119
Nov 2006	50	1	BD	BD	5	55	88	102
Dec 2006	50	1	BD	BD	5	50	52	110
Jan 2007	50	1	BD	BD	5	50	59	135.5
Feb 2007	59	1	BD	BD	5	50	50	130
Mar 2007	50	1	BD	0.2	5	476	1,060	100
Apr 2007	50	1	BD	BD	7	881	1,410	60
May 2007	55	1	BD	BD	5	474	847	76
Jun 2007	50	1	BD	BD	5	297	429	91
Jul 2007	50	1	BD	BD	5	84	78	130
Aug 2007	50	1	BD	BD	5	70	51	153
Sep 2007	55	1	BD	BD	5	50	43	154
Oct 2007	50	1	BD	BD	5	50	48	129
Nov 2007	50	1	BD	BD	5	50	31	138
Dec 2007	50	1	5	BD	5	50	29	152
Jan 2008	50	1	5	0.2	5	50	40	161
Feb 2008	50	1	BD	BD	5	50	39	160
Mar 2008	52	1	BD	BD	5	50	99	142
Apr 2008	50	1	BD	BD	8	2,030	3,380	90
May 2008	102	1	BD	BD	5.63	630	1,060	58
Jun 2008	50	1	BD	BD	5	298	475	86
Jul 2008	50	1	BD	BD	5	105	99	104

Instream Monitoring Point STR - 1

DMR	Total Recoverable Zinc	Total Recoverable Cadmium	Total Recoverable Selenium	Total Recoverable Mercury	Total Recoverable Arsenic	Total Recoverable Iron	Total Recoverable Aluminum	TDS
	Daily Max	Daily Max	Daily Max	Daily Max	Daily Max	Daily Max	Daily Max	Daily Max
	ug/L	ug/L	ug/L	ug/L	ug/L	ug/L	ug/L	mg/L
Aug 2008	50	1	BD	BD	5	94	89	126
Sep 2008	50	1	BD	BD	5	82	65	149
Oct 2008	50	1	BD	BD	5	78	77	123
Nov 2008	50	1	BD	BD	5	780	560	62
Dec 2008	50	1	BD	BD	5	91	101	107
Jan 2009	50	1	BD	BD	5	99	97	112
Feb 2009	BD	BD	BD	BD	BD	205	284	100
Mar 2009	BD	BD	BD	BD	BD	383	711	85
Apr 2009	74	BD	BD	BD	7	918	1,650	67
May 2009	BD	BD	BD	BD	5	564	1,020	57
Jun 2009	BD	BD	BD	BD	8	940	1,680	73
Jul 2009	BD	BD	BD	BD	BD	189	191	116
Aug 2009	BD	BD	BD	BD	BD	113	102	128
Sep 2009	BD	BD	BD	BD	BD	73	67	289
Oct 2009	BD	BD	BD	BD	BD	55	51	242
Nov 2009	BD	BD	BD	BD	BD	249	388	126
Dec 2009	BD	BD	BD	BD	BD	89	67	117
Jan 2010	BD	BD	BD	BD	BD	90	8.5	135
Feb 2010	BD	BD	BD	BD	BD	91	76	126
Mar 2010	BD	BD	BD	BD	5	1,280	1,020	101
Apr 2010	55	BD	BD	BD	6	1,200	2,000	98
May 2010	BD	BD	BD	BD	BD	890	1,410	79
Jun 2010	84	BD	BD	BD	BD	387	623	48
Jul 2010	BD	BD	BD	BD	BD	143	150	93
Aug 2010	BD	BD	BD	BD	BD	95	87	183

Instream Monitoring Point STR - 1

DMR	Total Recoverable Zinc	Total Recoverable Cadmium	Total Recoverable Selenium	Total Recoverable Mercury	Total Recoverable Arsenic	Total Recoverable Iron	Total Recoverable Aluminum	TDS
	Daily Max	Daily Max	Daily Max	Daily Max	Daily Max	Daily Max	Daily Max	Daily Max
	ug/L	ug/L	ug/L	ug/L	ug/L	ug/L	ug/L	mg/L
Sep 2010	ND	ND	ND	ND	ND	ND	ND	ND
Oct 2010	50	1	5	0.2	6	126	171	117
Nov 2010	BD	BD	BD	BD	BD	82	83	162
Dec 2010	BD	BD	BD	BD	BD	76	108	107
Jan 2011	BD	BD	BD	BD	BD	78	98	117
Feb 2011	BD	BD	BD	BD	7	121	74	391
Mar 2011	BD	BD	BD	BD	7	692	966	129
Apr 2011	BD	BD	BD	BD	5	931	1,460	105
May 2011	BD	BD	BD	BD	7	1,180	1,960	80
Jun 2011	BD	BD	BD	BD	10	291	394	152
Jul 2011	BD	BD	BD	BD	7	139	126	99
Aug 2011	BD	BD	BD	BD	7	96	76	172
Sep 2011	BD	BD	BD	BD	5	68	64	150
Oct 2011	BD	BD	BD	BD	BD	BD	81	153
Nov 2011	BD	BD	6	BD	14	72	46	489
Dec 2011	BD	BD	BD	BD	BD	52	66	164
Jan 2012	BD	BD	BD	BD	7	58	87	150
Feb 2012	BD	BD	BD	BD	BD	BD	53	139
Mar 2012	BD	BD	BD	BD	BD	242	374	118
Apr 2012	BD	BD	BD	BD	6	298	435	133
May 2012	BD	BD	BD	BD	BD	529	851	92
Jun 2012	BD	BD	BD	BD	5	94	87	114
Jul 2012	BD	BD	BD	BD	7	62	51	150
Aug 2012	BD	BD	BD	BD	7	98	80	138

Instream Monitoring Point STR - 1

DMR	Total Recoverable Zinc	Total Recoverable Cadmium	Total Recoverable Selenium	Total Recoverable Mercury	Total Recoverable Arsenic	Total Recoverable Iron	Total Recoverable Aluminum	TDS
	Daily Max	Daily Max	Daily Max	Daily Max	Daily Max	Daily Max	Daily Max	Daily Max
	ug/L	ug/L	ug/L	ug/L	ug/L	ug/L	ug/L	mg/L
Sep 2012	BD	BD	7	BD	11	58	40	527
Oct 2012	BD	BD	BD	BD	7	BD	26	300
Nov 2012	BD	BD	BD	BD	BD	BD	51	167
Dec 2012	BD	BD	BD	BD	BD	BD	42	132
Jan 2013	BD	BD	BD	BD	BD	BD	31	119
Feb 2013	BD	BD	BD	BD	BD	BD	56	139
Mar 2013	BD	BD	BD	BD	BD	BD	61	151
Apr 2013	BD	BD	BD	BD	BD	130	204	100
May 2013	BD	BD	BD	BD	8	160	20	68
Jun 2013	BD	BD	BD	BD	BD	338	483	88
Jul 2013	BD	BD	BD	BD	BD	82	92	111
Aug 2013	50	1	5	0.2	5	92	91	130
Sep 2013	50	1	5	0.2	5	74	63	149
Oct 2013	50	1	5	0.2	5	341	601	79
Nov 2013	50	1	5	0.2	5	390	651	60
Dec 2013	50	1	5	0.2	5	135	172	65
Jan 2014	50	1	5	0.2	5	97	93	68
Feb 2014	50	1	12	0.2	9	87	52	355
Mar 2014	50	1	5	0.2	5	643	1,110	88
Apr 2014	50	1	5	0.2	8	806	1,150	77
May 2014	50	1	5	0.2	5	131	269	63
Jun 2014	50	1	5	0.2	5	266	399	54
Jul 2014	50	1	5	0.2	5	155	199	85
Aug 2014	50	1	5	0.2	5	90	97	123
Sep 2014	50	1	5	0.2	6	58	60	127

Instream Monitoring Point STR - 1

DMR	Total Recoverable Zinc	Total Recoverable Cadmium	Total Recoverable Selenium	Total Recoverable Mercury	Total Recoverable Arsenic	Total Recoverable Iron	Total Recoverable Aluminum	TDS
	Daily Max	Daily Max	Daily Max	Daily Max	Daily Max	Daily Max	Daily Max	Daily Max
	ug/L	ug/L	ug/L	ug/L	ug/L	ug/L	ug/L	mg/L
Oct 2014	50	1	5	0.2	5	111	139	95
Nov 2014	50	1	5	0.2	5	89	75	114
Dec 2014	50	1	5	0.2	5	142	191	107
Jan 2015	50	1	5	0.2	5	100	79	116
Feb 2015	51	1	5	0.2	8	1,480	2,130	107
Mar 2015	50	1	5	0.2	8	1,080	1,450	83
Apr 2015	50	1	5	0.2	5	1,150	312	80
May 2015	50	1	5	0.2	7	1,640	2,300	65
Jun 2015	161	1	5	0.2	5	766	1,240	86
Jul 2015	50	1	5	0.2	7	331	606	90
Aug 2015	50	1	5	0.2	5	162	146	107
Sep 2015	50	1	5	0.2	5	101	112	113
Oct 2015	50	1	5	0.2	5	76	70	120
Nov 2015	50	1	5	0.2	5	115	91	96
Dec 2015	50	1	5	0.2	5	93	155	119
Jan 2016	50	1	5	0.2	5	106	76	119
Feb 2016	54	1	5	0.2	5	914	1,450	115
Mar 2016	50	1	5	0.2	6	1,340	1,820	88
Apr 2016	57	1	5	0.2	5	321	663	77
May 2016	63	1	5	0.2	5	488	852	89
Jun 2016	50	1	5	0.2	6	117	126	107
Jul 2016	50	1	5	0.2	5	99	95	129
Aug 2016	69	1	5	0.2	5	84	90	124
Sep 2016	50	1	5	0.2	5	79	113	116
Oct 2016	50	1	5	0.2	5	59	62	149

Instream Monitoring Point STR - 1

DMR	Total Recoverable Zinc	Total Recoverable Cadmium	Total Recoverable Selenium	Total Recoverable Mercury	Total Recoverable Arsenic	Total Recoverable Iron	Total Recoverable Aluminum	TDS
	Daily Max	Daily Max	Daily Max	Daily Max	Daily Max	Daily Max	Daily Max	Daily Max
	ug/L	ug/L	ug/L	ug/L	ug/L	ug/L	ug/L	mg/L
Nov 2016	50	1	5	0.2	5	51	50	142
Dec 2016	50	1	5	0.2	5	50	55	142
Jan 2017	50	1	5	0.2	5	50	57	154
Feb 2017	50	1	5	0.2	5	50	79	102
Mar 2017	50	1	5	0.2	5	92	72	98
Apr 2017	50	1	5	0.2	5	418	642	91
May 2017	50	1	5	0.2	5	488	779	93
Jun 2017	50	1	5	0.2	5	624	1,020	68
Jul 2017	50	1	5	0.2	5	130	110	87
Aug 2017	50	1	5	0.2	8	96	83	146
Sep 2017	50	1	5	0.2	7	65	57	153
Oct 2017	50	1	5	0.2	5	66	60	145
Nov 2017	50	1	5	0.2	5	50	50	140
Dec 2017	50	1	5	0.2	5	50	55	142
Jan 2018	50	1	5	0.2	5	89	84	132
Feb 2018	50	1	5	0.2	5	63	61	134
Mar 2018	50	1	5	0.2	5	78	105	106
Apr 2018	50	1	5	0.2	9	1,520	3,450	96
May 2018	60	1	5	0.2	11	881	1,440	84
Jun 2018	50	1	5	0.2	5	219	333	70
Jul 2018	50	1	5	0.2	6	909	1,910	85
Aug 2018	50	1	5	0.2	5	220	170	97
Sep 2018	50	1	5	0.2	5	114	112	133
Oct 2018	50	1	5	0.2	5	125	136	119
Nov 2018	50	1	5	0.2	5	94	99	105

Instream Monitoring Point STR - 1

DMR	Total Recoverable Zinc	Total Recoverable Cadmium	Total Recoverable Selenium	Total Recoverable Mercury	Total Recoverable Arsenic	Total Recoverable Iron	Total Recoverable Aluminum	TDS
	Daily Max	Daily Max	Daily Max	Daily Max	Daily Max	Daily Max	Daily Max	Daily Max
	ug/L	ug/L	ug/L	ug/L	ug/L	ug/L	ug/L	mg/L
Dec 2018	50	1	5	0.2	5	127	102	112
Jan 2019	50	1	5	0.2	5	87	129	125
Feb 2019	50	1	5	0.2	5	118	107	132
Mar 2019	50	1	5	0.2	5	265	154	131
Apr 2019	50	1	5	0.2	7	1,230	2,160	26
May 2019	50	1	5	0.2	6	615	1,050	54
Jun 2019	50	1	5	0.2	5	447	791	73
Jul 2019	50	1	5	0.2	6	331	420	100
Aug 2019	50	1	5	0.2	5	181	170	132
Sep 2019	50	1	5	0.2	5	86	86	133
Oct 2019	50	1	5	0.2	5	130	163	93
Nov 2019	50	1	5	0.2	7	2,010	3,000	110
Dec 2019	50	1	5	0.2	5	342	472	80
Jan 2020	50	1	5	0.2	5	188	148	99
Feb 2020	50	1	5	0.2	5	156	132	117
Mar 2020	50	1	5	0.2	7	1,720	3,070	88
Apr 2020	50	1	5	0.2	11	2,660	3,060	85
May 2020	50	1	5	0.2	8	1,060	1,590	79
Jun 2020	50	1	5	0.2	5	250	239	79
Jul 2020	50	1	5	0.2	8	265	282	118
Aug 2020	50	1	5	0.2	6	121	105	122
Sep 2020	50	1	5	0.2	5	77	73	129
Oct 2020	50	1	5	0.2	5	141	118	124
Nov 2020	50	1	5	0.2	5	57	65	124
Dec 2020	50	1	5	0.2	5	85	86	141

Instream Monitoring Point STR - 1

DMR	Total Recoverable Zinc	Total Recoverable Cadmium	Total Recoverable Selenium	Total Recoverable Mercury	Total Recoverable Arsenic	Total Recoverable Iron	Total Recoverable Aluminum	TDS
	Daily Max	Daily Max	Daily Max	Daily Max	Daily Max	Daily Max	Daily Max	Daily Max
	ug/L	ug/L	ug/L	ug/L	ug/L	ug/L	ug/L	mg/L
Jan 2021	50	1	5	0.2	5	50	48	142
Feb 2021	50	1	5	0.2	5	50	46	135
Mar 2021	50	1	5	0.2	5	50	62	129
Apr 2021	50	1	5	0.2	7	1,210	1,710	66
May 2021	50	1	5	0.2	5	621	996	70
Jun 2021	50	1	5	0.2	5	174	167	71
Jul 2021	50	1	5	0.2	6	50	46	118
Aug 2021	50	1	5	0.2	7	57	35	139
Sep 2021	50	1	5	0.2	5	50	38	150
Oct 2021	50	1	5	0.2	5	70	67	143
Nov 2021	50	1	5	0.2	5	50	68	95
Dec 2021	50	1	5	0.2	5	50	53	102
Jan 2022	50	1	5	0.2	5	50	57	111
Feb 2022	50	1	5	0.2	5	50	51	119
Mar 2022	50	1	5	0.2	5	149	211	93
Apr 2022	50	1	5	0.2	5	205	357	81
May 2022	50	1	5	0.2	5	653	1,170	73
Jun 2022	50	1	5	0.2	5	282	386	75
Jul 2022	50	1	5	0.2	5	67	81	98
Aug 2022	50	1	5	0.2	5	50	37	119
Sep 2022	50	1	5	0.2	6	129	70	143
Oct 2022	50	1	5	0.2	5	50	45	139
Nov 2022	EC	EC	EC	EC	EC	EC	EC	EC
Dec 2022	EC	EC	EC	EC	EC	EC	EC	EC

Instream Monitoring Point STR – 2

DMR	Flow rate		Water Temperature	pH		TSS	Ammonia-Nitrogen	Oil and grease visual	TPH
	30-Day Avg	Daily Max	Daily Max	Daily Max	Daily Min	Daily Max	Daily Max	Daily Max	Daily Max
	MGD	MGD	deg C	SU	SU	mg/L	mg/L	N=0;Y=1	mg/L
Jul 2005	0.46	0.46	21.7	8.25	8.25	10	0.05	0	NR
Aug 2005	0.24	0.24	17.7	8.63	8.63	10	0.05	0	NR
Sep 2005	0.22	0.22	15.5	8.6	8.6	10	0.05	0	NR
Oct 2005	0.19	0.19	8	8.73	8.73	10	0.05	0	NR
Nov 2005	0.22	0.22	1.3	7.67	7.67	10	0.05	0	NR
Dec 2005	0.22	0.22	0.9	7.6	7.6	10	0.05	0	NR
Jan 2006	0.43	0.43	0.2	7.61	7.61	10	0.05	0	NR
Feb 2006	0.43	0.43	0.9	7.42	7.42	10	0.05	0	NR
Mar 2006	0.47	0.47	1.5	7.53	7.53	10	0.05	0	NR
Apr 2006	13.64	13.64	4.8	7.33	7.33	10	0.05	0	NR
May 2006	5.65	5.65	12.6	8.32	8.32	10	0.05	0	NR
Jun 2006	1.77	1.77	16.5	8.22	8.22	10	0.05	0	NR
Jul 2006	0.57	0.57	20.5	8.32	8.32	10	0.05	0	NR
Aug 2006	0.33	0.33	17	8.39	8.39	10	0.05	0	NR
Sep 2006	0.4	0.4	9.3	8.36	8.36	10	0.05	0	NR
Oct 2006	0.78	0.78	2.8	8.77	8.77	10	0.05	0	NR
Nov 2006	0.79	0.79	0.3	8.51	8.51	10	0.05	0	NR
Dec 2006	0.72	0.72	0.2	8.06	8.06	10	0.05	0	NR
Jan 2007	0.58	0.58	0.7	7.79	7.79	10	0.05	0	NR
Feb 2007	0.54	0.54	0.8	7.53	7.53	10	0.05	0	NR
Mar 2007	1.44	1.44	0.9	7.05	7.05	10	0.05	0	NR
Apr 2007	8.31	8.31	5.3	7.38	7.38	10	0.05	0	NR
May 2007	4.78	4.78	9.8	8.52	8.52	10	0.05	0	NR
Jun 2007	5.28	5.28	12.2	8.15	8.15	10	0.05	0	NR

Instream Monitoring Point STR – 2

DMR	Flow rate		Water Temperature	pH		TSS	Ammonia-Nitrogen	Oil and grease visual	TPH
	30-Day Avg	Daily Max	Daily Max	Daily Max	Daily Min	Daily Max	Daily Max	Daily Max	Daily Max
	MGD	MGD	deg C	SU	SU	mg/L	mg/L	N=0;Y=1	mg/L
Jul 2007	0.66	0.66	19.2	8.43	8.43	10	0.05	0	NR
Aug 2007	0.57	0.57	19.9	8.31	8.31	10	0.05	0	NR
Sep 2007	0.53	0.53	12.5	7.78	7.78	10	0.05	0	NR
Oct 2007	0.46	0.46	5.8	8.27	8.27	10	0.05	0	NR
Nov 2007	0.51	0.51	1.9	8.18	8.18	10	0.05	0	NR
Dec 2007	0.5	0.5	0.2	8.22	8.22	10	0.05	0	NR
Jan 2008	0.5	0.5	0.6	7.44	7.44	10	0.05	0	NR
Feb 2008	0.5	0.5	0.7	7.54	7.54	10	0.05	0	NR
Mar 2008	0.5	0.5	0.7	7.8	7.8	10	0.05	0	NR
Apr 2008	8.7	8.7	5.1	7.6	7.6	10	0.05	0	NR
May 2008	26.34	26.34	9.1	8.01	8.01	10	0.05	0	NR
Jun 2008	7.09	7.09	12.9	8.26	8.26	10	0.05	0	NR
Jul 2008	2.18	2.18	15.6	8.27	8.27	10	0.05	0	NR
Aug 2008	1.45	1.45	13.2	8.22	8.22	10	0.05	0	NR
Sep 2008	130	1.23	10.3	8.6	8.6	10	0.05	0	NR
Oct 2008	0.98	0.98	4.2	8.34	8.34	10	0.05	0	NR
Nov 2008	3.37	3.37	0.1	8.45	8.45	10	0.05	0	NR
Dec 2008	1.44	1.44	-0.2	8.35	8.35	10	0.05	0	NR
Jan 2009	1.15	1.15	0.8	8.2	8.2	10	0.05	0	NR
Feb 2009	1.37	1.37	0.8	8.41	8.41	BD	BD	0	NR
Mar 2009	1.3	1.3	0.5	8.12	8.12	BD	BD	0	NR
Apr 2009	35.26	35.26	5.9	8.06	8.06	BD	BD	0	NR
May 2009	14.58	14.58	6.8	8.2	8.2	BD	BD	0	NR
Jun 2009	10.3	10.3	7.5	8.02	8.02	BD	BD	0	NR
Jul 2009	2.1	2.1	14.1	8.28	8.28	BD	BD	0	NR

Instream Monitoring Point STR – 2

DMR	Flow rate		Water Temperature	pH		TSS	Ammonia-Nitrogen	Oil and grease visual	TPH
	30-Day Avg	Daily Max	Daily Max	Daily Max	Daily Min	Daily Max	Daily Max	Daily Max	Daily Max
	MGD	MGD	deg C	SU	SU	mg/L	mg/L	N=0;Y=1	mg/L
Aug 2009	1.48	1.48	14	8.42	8.42	BD	BD	0	NR
Sep 2009	1.1	1.1	11.8	8.59	8.59	BD	BD	0	NR
Oct 2009	1.16	1.16	1.5	8.54	8.54	BD	BD	0	NR
Nov 2009	2.16	2.16	3	8.69	8.68	BD	BD	0	NR
Dec 2009	1.15	1.15	0.4	8.31	8.31	BD	BD	0	NR
Jan 2010	1.15	1.15	0.4	8.4	8.4	BD	BD	0	NR
Feb 2010	1.15	1.15	1.9	8.23	8.23	BD	BD	0	NR
Mar 2010	1.15	1.15	1.8	8.14	8.14	BD	BD	0	NR
Apr 2010	16.45	16.45	6.5	7.89	7.89	BD	BD	0	NR
May 2010	8.38	8.38	6	8.31	8.31	BD	BD	0	NR
Jun 2010	5.99	5.99	11.2	8.53	8.53	BD	BD	0	NR
Jul 2010	1.88	1.88	14	8.33	8.33	BD	BD	0	NR
Aug 2010	1.6	1.6	15.2	8.65	8.65	BD	BD	0	NR
Sep 2010	ND	ND	ND	ND	ND	ND	ND	ND	ND
Oct 2010	0.98	0.98	4.4	8.12	8.12	10	0.05	0	NR
Nov 2010	0.95	0.95	2.2	8.07	8.07	BD	BD	0	NR
Dec 2010	1.18	1.18	0.6	8.12	8.12	BD	BD	0	NR
Jan 2011	1.22	1.22	1.5	7.92	7.92	BD	BD	0	NR
Feb 2011	1.31	1.31	0.5	7.76	7.76	BD	BD	0	NR
Mar 2011	2.94	2.94	0.6	8.09	8.09	BD	BD	0	NR
Apr 2011	5.96	5.96	6.2	8.3	8.3	BD	BD	0	NR
May 2011	23.37	23.37	8.4	7.98	7.98	BD	BD	0	NR
Jun 2011	6.65	6.65	8.4	8.16	8.16	BD	BD	0	NR
Jul 2011	1,398	1,398	19.6	8.6	8.6	BD	BD	0	NR
Aug 2011	1.17	1.17	15.9	8.51	8.51	BD	BD	0	NR

Instream Monitoring Point STR – 2

DMR	Flow rate		Water Temperature	pH		TSS	Ammonia-Nitrogen	Oil and grease visual	TPH
	30-Day Avg	Daily Max	Daily Max	Daily Max	Daily Min	Daily Max	Daily Max	Daily Max	Daily Max
	MGD	MGD	deg C	SU	SU	mg/L	mg/L	N=0;Y=1	mg/L
Sep 2011	0.84	0.84	12.6	8.67	8.67	BD	BD	0	NR
Oct 2011	0.85	0.85	8.1	8.57	8.57	BD	BD	0	NR
Nov 2011	1.19	1.19	0.8	8.46	8.46	BD	BD	0	NR
Dec 2011	0.66	0.66	0.9	8.22	8.22	BD	BD	0	NR
Jan 2012	0.63	0.63	1.1	8.39	8.39	BD	BD	0	NR
Feb 2012	0.59	0.59	1.5	8.06	8.06	BD	BD	0	NR
Mar 2012	2.75	2.75	0.9	7.98	7.98	BD	BD	0	NR
Apr 2012	1.44	1.44	6.3	8.01	8.01	BD	BD	0	NR
May 2012	1,918	1,918	8.1	8.68	8.68	BD	BD	0	NR
Jun 2012	0.81	0.81	15.9	8.5	8.5	BD	BD	0	NR
Jul 2012	0.38	0.38	19.3	8.69	8.69	BD	BD	0	NR
Aug 2012	0.47	0.47	15.6	8.61	8.61	BD	BD	0	NR
Sep 2012	0.32	0.32	14.5	8.55	8.55	BD	BD	0	NR
Oct 2012	0.47	0.47	7.5	8.27	8.27	BD	BD	0	NR
Nov 2012	0.47	0.47	4.2	8.45	8.45	BD	BD	0	NR
Dec 2012	0.32	0.31	1.8	8.46	8.46	BD	BD	0	NR
Jan 2013	0.32	0.32	1.2	7.99	7.99	BD	BD	0	NR
Feb 2013	0.32	0.32	1.9	8.07	8.07	BD	BD	0	NR
Mar 2013	0.36	0.36	2.4	8.03	8.03	BD	BD	0	NR
Apr 2013	0.96	0.96	2.4	7.91	7.91	BD	BD	0	NR
May 2013	2.56	2.56	9.9	8.48	8.48	BD	BD	0	NR
Jun 2013	4.73	4.73	14.7	8.13	8.13	BD	BD	0	NR
Jul 2013	1.63	1.63	15.5	8.2	8.2	BD	BD	0	NR
Aug 2013	0.81	0.81	16.5	8.37	8.37	10	0.05	0	NR

Instream Monitoring Point STR – 2

DMR	Flow rate		Water Temperature	pH		TSS	Ammonia-Nitrogen	Oil and grease visual	TPH
	30-Day Avg	Daily Max	Daily Max	Daily Max	Daily Min	Daily Max	Daily Max	Daily Max	Daily Max
	MGD	MGD	deg C	SU	SU	mg/L	mg/L	N=0;Y=1	mg/L
Sep 2013	0.58	0.58	13.6	8.37	8.37	10	0.05	0	NR
Oct 2013	17.25	17.25	5.3	8.07	8.07	10	0.05	0	NR
Nov 2013	4.85	4.85	3.8	8.31	8.31	10	0.05	0	NR
Dec 2013	1.64	1.64	2.2	8.28	8.28	10	0.05	0	NR
Jan 2014	0.74	0.74	0.6	8.14	8.14	10	0.05	0	NR
Feb 2014	0.94	0.94	0.4	8.18	8.18	10	0.05	0	NR
Mar 2014	2.6	2.6	0.4	8.14	8.14	10	0.05	0	NR
Apr 2014	31.86	31.86	5.7	7.86	7.86	10	0.05	0	NR
May 2014	16.32	16.32	7.8	8.01	8.01	10	0.05	0	NR
Jun 2014	3.5	3.5	11.6	8.28	8.28	10	0.05	0	NR
Jul 2014	1.79	1.79	15.8	8.52	8.52	10	0.05	0	NR
Aug 2014	1.36	1.36	16.9	8.41	8.41	10	0.05	0	NR
Sep 2014	0.86	0.86	11.3	8.24	8.24	10	0.05	0	NR
Oct 2014	1.26	1.26	7.8	8.51	8.51	10	0.05	0	NR
Nov 2014	0.7	0.7	0.7	8.28	8.28	10	0.05	0	NR
Dec 2014	0.71	0.71	0.5	8.21	8.21	10	0.05	0	NR
Jan 2015	0.8	0.8	0.3	8.17	8.17	10	0.05	0	NR
Feb 2015	2.9	2.9	0.3	8.13	8.13	10	0.05	0	NR
Mar 2015	2.43	2.43	2.7	8.11	8.11	10	0.05	0	NR
Apr 2015	3.01	3.01	7.1	8.14	8.14	10	0.05	0	NR
May 2015	21.32	21.32	5.2	8.07	8.07	10	0.05	0	NR
Jun 2015	5.75	5.75	12.9	8.22	8.22	10	0.05	0	NR
Jul 2015	2.5	2.5	16.5	8.44	8.44	10	0.05	0	NR
Aug 2015	0.95	0.95	17.9	8.31	8.31	10	0.05	0	NR
Sep 2015	1.1	1.1	12.3	8.34	8.34	10	0.05	0	NR

Instream Monitoring Point STR – 2

DMR	Flow rate		Water Temperature	pH		TSS	Ammonia-Nitrogen	Oil and grease visual	TPH
	30-Day Avg	Daily Max	Daily Max	Daily Max	Daily Min	Daily Max	Daily Max	Daily Max	Daily Max
	MGD	MGD	deg C	SU	SU	mg/L	mg/L	N=0;Y=1	mg/L
Oct 2015	1.02	1.02	8.3	8.38	8.38	10	0.05	0	NR
Nov 2015	0.96	0.96	1	8.28	8.28	10	0.05	0	NR
Dec 2015	0.87	0.87	0.5	8.32	8.32	10	0.05	0	NR
Jan 2016	0.63	0.63	0.4	8.31	8.31	10	0.05	0	NR
Feb 2016	0.72	0.72	0.2	8.18	8.18	10	0.05	0	NR
Mar 2016	1.78	1.78	2.9	8.23	8.23	10	0.05	0	NR
Apr 2016	5.06	5.06	2.9	8.2	8.2	10	0.05	0	NR
May 2016	2.38	2.38	7.6	8.26	8.26	10	0.05	0	NR
Jun 2016	0.93	0.93	18	8.57	8.57	10	0.05	0	NR
Jul 2016	0.57	0.57	15.6	8.51	8.51	10	0.05	0	NR
Aug 2016	0.48	0.48	11.8	8.47	8.47	10	0.05	0	NR
Sep 2016	0.55	0.55	11.8	8.4	8.4	10	0.05	0	NR
Oct 2016	0.4	0.4	6.8	8.4	8.4	10	0.05	0	NR
Nov 2016	0.42	0.42	4.2	8.56	8.56	10	0.05	0	NR
Dec 2016	0.34	0.34	0.3	8.21	8.21	10	0.05	0	NR
Jan 2017	0.42	0.42	0.1	8.31	8.31	10	0.05	0	NR
Feb 2017	0.57	0.57	0.6	8.27	8.27	10	0.05	0	NR
Mar 2017	0.81	0.81	0.2	8.52	8.52	10	0.05	0	NR
Apr 2017	0.85	0.85	3	8.34	8.34	10	0.05	0	NR
May 2017	2.06	2.06	6.9	8.26	8.26	10	0.05	0	NR
Jun 2017	2.41	2.41	13.2	8.36	8.36	10	0.05	0	NR
Jul 2017	0.86	0.86	19.2	8.68	8.68	10	0.05	0	NR
Aug 2017	0.37	0.37	17.7	8.62	8.62	10	0.05	0	NR
Sep 2017	0.34	0.34	11.4	8.45	8.45	10	0.05	0	NR
Oct 2017	0.34	0.34	5.2	8.27	8.27	10	0.05	0	NR

Instream Monitoring Point STR – 2

DMR	Flow rate		Water Temperature	pH		TSS	Ammonia-Nitrogen	Oil and grease visual	TPH
	30-Day Avg	Daily Max	Daily Max	Daily Max	Daily Min	Daily Max	Daily Max	Daily Max	Daily Max
	MGD	MGD	deg C	SU	SU	mg/L	mg/L	N=0;Y=1	mg/L
Nov 2017	0.22	0.22	0.5	8.42	8.42	10	0.05	0	NR
Dec 2017	0.25	0.25	0.9	8.4	8.4	10	0.05	0	NR
Jan 2018	FR	FR	0.2	8.37	8.37	10	0.05	0	NR
Feb 2018	FR	FR	0.3	8.24	8.24	10	0.05	0	NR
Mar 2018	FR	FR	0.2	8.18	8.18	10	0.05	0	NR
Apr 2018	4.52	4.52	3.9	8.18	8.18	10	0.05	0	NR
May 2018	4.05	4.05	12	8.52	8.52	10	0.05	0	NR
Jun 2018	1.39	1.39	15.9	8.52	8.52	10	0.05	0	NR
Jul 2018	3.27	3.27	15.1	8.3	8.3	10	0.05	0	NR
Aug 2018	0.97	0.97	12.2	8.21	8.21	10	0.05	0	NR
Sep 2018	0.59	0.59	15.9	8.55	8.55	10	0.05	0	NR
Oct 2018	0.51	0.51	4.1	8.4	8.4	10	0.05	0	NR
Nov 2018	0.57	0.57	0.5	8.28	8.28	10	0.05	0	NR
Dec 2018	FR	FR	0.6	8.28	8.28	10	0.05	0	NR
Jan 2019	FR	FR	0.6	8.16	8.16	10	0.05	0	NR
Feb 2019	FR	FR	0.2	8.02	8.02	10	0.05	0	NR
Mar 2019	FR	FR	1.5	8.18	8.18	10	0.05	0	NR
Apr 2019	17.67	17.67	7.1	7.56	7.56	10	0.05	0	NR
May 2019	7.4	7.4	4.8	8.22	8.22	10	0.05	0	NR
Jun 2019	3.88	3.88	11.2	8.41	8.41	10	0.05	0	NR
Jul 2019	2.29	2.29	16.9	8.13	8.13	10	0.05	0	NR
Aug 2019	1.11	1.11	14.3	8.27	8.27	10	0.05	0	NR
Sep 2019	0.94	0.94	11.6	8.41	8.41	10	0.05	0	NR
Oct 2019	1.17	1.17	3.6	8.34	8.34	10	0.05	0	NR
Nov 2019	2.73	2.73	1.5	8.22	8.22	10	0.05	0	NR

Instream Monitoring Point STR – 2

DMR	Flow rate		Water Temperature	pH		TSS	Ammonia-Nitrogen	Oil and grease visual	TPH
	30-Day Avg	Daily Max	Daily Max	Daily Max	Daily Min	Daily Max	Daily Max	Daily Max	Daily Max
	MGD	MGD	deg C	SU	SU	mg/L	mg/L	N=0;Y=1	mg/L
Dec 2019	1.22	1.22	0.6	8.28	8.28	10	0.05	0	NR
Jan 2020	WR	WR	0.2	8.09	8.09	10	0.05	0	NR
Feb 2020	0.84	0.84	0.5	8.25	8.25	10	0.05	0	NR
Mar 2020	2.49	2.49	1.4	7.99	7.99	10	0.05	0	NR
Apr 2020	16.32	16.32	5.6	7.58	7.58	10	0.05	0	NR
May 2020	8.04	8.04	9.5	8.23	8.23	10	0.05	0	NR
Jun 2020	1.78	1.78	15.8	8.44	8.44	10	0.05	0	NR
Jul 2020	1.28	1.28	15	8.36	8.36	10	0.05	0	NR
Aug 2020	0.69	0.69	14.7	8.25	8.25	10	0.05	0	NR
Sep 2020	0.65	0.65	11.8	8.6	8.6	10	0.05	0	NR
Oct 2020	0.46	0.46	6.7	8.29	8.29	10	0.05	0	NR
Nov 2020	0.34	0.34	0	8.14	8.14	10	0.05	0	NR
Dec 2020	FR	FR	0.3	8.38	8.38	10	0.05	0	NR
Jan 2021	FR	FR	1.8	8.14	8.14	10	0.05	0	NR
Feb 2021	FR	FR	1.6	8.16	8.16	10	0.05	0	NR
Mar 2021	FR	FR	2.2	8.12	8.12	10	0.05	0	NR
Apr 2021	2.04	2.04	7.4	8.15	8.15	10	0.05	0	NR
May 2021	1.97	1.97	10.3	8.26	8.26	10	0.05	0	NR
Jun 2021	0.51	0.51	16.9	8.07	8.07	10	0.05	0	NR
Jul 2021	0.28	0.28	17.2	8.31	8.31	10	0.05	0	NR
Aug 2021	0.32	0.32	19.7	8.47	8.47	10	0.05	0	NR
Sep 2021	0.29	0.29	12.7	8.42	8.42	10	0.05	0	NR
Oct 2021	0.4	0.4	7.9	8.27	8.27	10	0.05	0	NR
Nov 2021	0.6	0.6	1.2	8.42	8.42	10	0.05	0	NR
Dec 2021	0.3	0.3	0.2	8.26	8.26	10	0.05	0	NR

Instream Monitoring Point STR – 2

DMR	Flow rate		Water Temperature	pH		TSS	Ammonia-Nitrogen	Oil and grease visual	TPH
	30-Day Avg	Daily Max	Daily Max	Daily Max	Daily Min	Daily Max	Daily Max	Daily Max	Daily Max
	MGD	MGD	deg C	SU	SU	mg/L	mg/L	N=0;Y=1	mg/L
Jan 2022	0.5	0.5	0.2	8.18	8.18	10	0.05	0	NR
Feb 2022	0.32	0.32	0.2	8.02	8.02	10	0.05	0	NR
Mar 2022	0.4	0.4	0.52	8.09	8.09	10	0.05	0	NR
Apr 2022	0.98	0.98	5	7.6	7.6	10	0.05	0	NR
May 2022	2.89	2.89	11.9	7.32	7.32	10	0.05	0	NR
Jun 2022	1.4	1.4	7.74	7.74	7.74	10	0.05	0	NR
Jul 2022	0.73	0.73	20.2	7.95	7.95	10	0.05	0	NR
Aug 2022	0.33	0.33	17	8.4	8.4	10	0.05	0	NR
Sep 2022	0.34	0.34	17.8	8.39	8.39	10	0.05	0	NR
Oct 2022	0.09	0.09	12.3	7.22	7.22	10	0.05	0	NR
Nov 2022	0.26	0.26	5.8	7.04	7.04	10	0.05	0	NR
Dec 2022	0.22	0.22	3.4	7.16	7.16	10	0.05	0	NR

Instream Monitoring Point STR – 2

DMR	Total Recoverable Copper	WAD Cyanide	Total Recoverable Chromium	Nitrate-Nitrogen	Total Recoverable Nickel	Total Hardness	Total Recoverable Lead	Total Recoverable Silver
	Daily Max	Daily Max	Daily Max	Daily Max	Daily Max	Daily Max	Daily Max	Daily Max
	ug/L	mg/L	ug/L	mg/L	ug/L	mg/L	ug/L	ug/L
Jul 2005	5	10	1	0.12	5	180	1	1
Aug 2005	5	10	1	1.59	5	157	1	1
Sep 2005	5	10	1	2.1	5	163	1	1
Oct 2005	5	10	1	0.05	5	164	1	1
Nov 2005	5	10	1	0.05	5	156	1	1

Instream Monitoring Point STR – 2

DMR	Total Recoverable Copper	WAD Cyanide	Total Recoverable Chromium	Nitrate-Nitrogen	Total Recoverable Nickel	Total Hardness	Total Recoverable Lead	Total Recoverable Silver
	Daily Max	Daily Max	Daily Max	Daily Max	Daily Max	Daily Max	Daily Max	Daily Max
	ug/L	mg/L	ug/L	mg/L	ug/L	mg/L	ug/L	ug/L
Dec 2005	5	10	1	0.22	5	166	1	1
Jan 2006	5	10	1	0.08	5	163	1	1
Feb 2006	5	10	1	0.22	5	172	1	1
Mar 2006	5	10	1	0.13	5	155	1	1
Apr 2006	5	10	1	0.32	5	83.4	1	1
May 2006	5	10	1	0.26	5	84.5	1	1
Jun 2006	5	10	1	0.22	5	116	1	1
Jul 2006	5	10	1	0.08	5	152	1	1
Aug 2006	5	10	1	0.05	5	160	1	1
Sep 2006	5	10	1	0.05	5	159	1	1
Oct 2006	5	10	1	0.14	5	147	1	1
Nov 2006	5	10	1	0.2	5	155	1	1
Dec 2006	5	10	1	0.29	5	142	1	1
Jan 2007	5	10	1	0.22	5	167	1	1
Feb 2007	5	10	1	0.24	5	152.5	1	1
Mar 2007	5	10	1	0.91	5	126	1	1
Apr 2007	5	10	1	0.07	5	60.7	1	1
May 2007	5	10	1	0.07	5	80.6	1	1
Jun 2007	5	10	1	0.32	5	105	1	1
Jul 2007	5	10	1	0.05	5	144	1	1
Aug 2007	5	10	1	0.05	5	152	1	1
Sep 2007	5	10	1	0.05	5	160	1	1
Oct 2007	5	10	1	0.05	5	158	1	1
Nov 2007	5	10	1	0.05	5	151	1	1
Dec 2007	5	10	1	0.05	5	154	1	1

Instream Monitoring Point STR – 2

DMR	Total Recoverable Copper	WAD Cyanide	Total Recoverable Chromium	Nitrate-Nitrogen	Total Recoverable Nickel	Total Hardness	Total Recoverable Lead	Total Recoverable Silver
	Daily Max	Daily Max	Daily Max	Daily Max	Daily Max	Daily Max	Daily Max	Daily Max
	ug/L	mg/L	ug/L	mg/L	ug/L	mg/L	ug/L	ug/L
Jan 2008	5	10	1	0.1	5	144	1	1
Feb 2008	5	10	1	0.13	5	154	1	1
Mar 2008	5	10	1	0.12	5	140	1	1
Apr 2008	5	10	1	0.5	5	77.7	1	1
May 2008	5	10	1	0.09	5	49.6	2	1
Jun 2008	5	10	1	0.2	5	96.5	1	1
Jul 2008	5	10	1	0.16	5	143	1	1
Aug 2008	5	BD	1	0.24	5	149	1	1
Sep 2008	5	BD	1	0.05	5	148	1	1
Oct 2008	5	BD	1	0.05	5	166	1	1
Nov 2008	5	BD	1	0.08	5	116	1	1
Dec 2008	5	BD	1	0.15	5	165	1	1
Jan 2009	5	BD	1	0.12	5	150	1	1
Feb 2009	BD	BD	BD	0.11	BD	153	BD	BD
Mar 2009	BD	BD	BD	0.3	BD	128	BD	BD
Apr 2009	BD	BD	2	0.13	BD	67.1	1	BD
May 2009	BD	BD	BD	BD	BD	52.6	BD	BD
Jun 2009	BD	BD	1	0.17	BD	62.6	BD	BD
Jul 2009	BD	BD	BD	0.15	BD	143	BD	BD
Aug 2009	BD	BD	BD	0.07	BD	163	BD	BD
Sep 2009	BD	BD	BD	0.17	BD	168	BD	BD
Oct 2009	BD	BD	BD	0.22	BD	172	BD	BD
Nov 2009	BD	BD	BD	0.33	BD	143	BD	BD
Dec 2009	BD	BD	BD	0.32	BD	164	BD	BD
Jan 2010	BD	BD	BD	0.26	BD	159	BD	BD

Instream Monitoring Point STR – 2

DMR	Total Recoverable Copper	WAD Cyanide	Total Recoverable Chromium	Nitrate-Nitrogen	Total Recoverable Nickel	Total Hardness	Total Recoverable Lead	Total Recoverable Silver
	Daily Max	Daily Max	Daily Max	Daily Max	Daily Max	Daily Max	Daily Max	Daily Max
	ug/L	mg/L	ug/L	mg/L	ug/L	mg/L	ug/L	ug/L
Feb 2010	BD	BD	BD	0.28	BD	165	BD	BD
Mar 2010	BD	BD	BD	0.37	BD	152	BD	BD
Apr 2010	BD	BD	2	0.17	BD	49.4	2	BD
May 2010	BD	BD	BD	0.11	BD	75.4	BD	BD
Jun 2010	BD	BD	BD	0.33	BD	96.2	BD	BD
Jul 2010	BD	BD	BD	0.19	BD	140	BD	BD
Aug 2010	BD	BD	BD	0.34	BD	155	BD	BD
Sep 2010	ND	ND	ND	ND	ND	ND	ND	ND
Oct 2010	5	10	1	0.33	5	146	1	1
Nov 2010	BD	BD	BD	0.16	BD	159	BD	BD
Dec 2010	BD	BD	BD	0.17	BD	159	BD	BD
Jan 2011	BD	BD	BD	0.26	BD	153	BD	BD
Feb 2011	BD	BD	BD	1.51	8	177	BD	BD
Mar 2011	BD	BD	BD	0.47	BD	119	BD	BD
Apr 2011	BD	BD	BD	0.14	BD	85.3	BD	BD
May 2011	BD	BD	1	0.31	BD	71.6	1	BD
Jun 2011	BD	BD	BD	0.23	BD	95.1	BD	BD
Jul 2011	BD	BD	BD	0.08	BD	155	BD	BD
Aug 2011	BD	BD	BD	0.77	BD	162	BD	BD
Sep 2011	BD	BD	BD	BD	BD	166	BD	BD
Oct 2011	BD	BD	BD	BD	BD	165	BD	BD
Nov 2011	BD	BD	BD	4.97	11	216	BD	BD
Dec 2011	BD	BD	BD	0.62	BD	165	BD	BD
Jan 2012	BD	BD	BD	0.39	BD	167	BD	BD

Instream Monitoring Point STR – 2

DMR	Total Recoverable Copper	WAD Cyanide	Total Recoverable Chromium	Nitrate-Nitrogen	Total Recoverable Nickel	Total Hardness	Total Recoverable Lead	Total Recoverable Silver
	Daily Max	Daily Max	Daily Max	Daily Max	Daily Max	Daily Max	Daily Max	Daily Max
	ug/L	mg/L	ug/L	mg/L	ug/L	mg/L	ug/L	ug/L
Feb 2012	BD	BD	BD	0.29	BD	161	BD	BD
Mar 2012	BD	BD	BD	0.31	BD	148	BD	BD
Apr 2012	BD	BD	BD	0.38	BD	133	BD	BD
May 2012	BD	BD	BD	0.14	BD	100	BD	BD
Jun 2012	BD	BD	BD	0.06	BD	149	BD	BD
Jul 2012	BD	BD	BD	BD	BD	178	BD	BD
Aug 2012	BD	BD	BD	BD	BD	169	BD	BD
Sep 2012	BD	BD	BD	BD	BD	184	BD	BD
Oct 2012	BD	BD	BD	2.43	6	215	BD	BD
Nov 2012	BD	BD	BD	BD	BD	175	BD	BD
Dec 2012	BD	BD	BD	BD	BD	197	BD	BD
Jan 2013	BD	BD	BD	0.22	BD	188	BD	BD
Feb 2013	BD	BD	BD	0.15	BD	181	BD	BD
Mar 2013	BD	BD	BD	0.09	BD	175	BD	BD
Apr 2013	BD	BD	BD	0.32	BD	145	BD	BD
May 2013	BD	BD	1	BD	BD	92.4	BD	BD
Jun 2013	BD	BD	BD	0.16	BD	105	BD	BD
Jul 2013	BD	BD	BD	BD	BD	148	BD	BD
Aug 2013	5	0.01	1	0.09	5	153	1	1
Sep 2013	5	0.01	1	0.05	5	174	1	1
Oct 2013	5	0.01	1	0.24	5	94.8	1	1
Nov 2013	5	0.01	1	0.21	5	102	1	1
Dec 2013	5	0.01	1	0.27	5	131	1	1
Jan 2014	5	0.01	1	0.26	5	156	1	1
Feb 2014	5	0.01	1	2.9	5	185	1	1

Instream Monitoring Point STR – 2

DMR	Total Recoverable Copper	WAD Cyanide	Total Recoverable Chromium	Nitrate-Nitrogen	Total Recoverable Nickel	Total Hardness	Total Recoverable Lead	Total Recoverable Silver
	Daily Max	Daily Max	Daily Max	Daily Max	Daily Max	Daily Max	Daily Max	Daily Max
	ug/L	mg/L	ug/L	mg/L	ug/L	mg/L	ug/L	ug/L
Mar 2014	5	0.01	1	0.32	5	113	1	1
Apr 2014	5	0.01	1	0.19	5	52.9	1	1
May 2014	5	0.01	1	0.09	5	57.7	1	1
Jun 2014	5	0.01	1	0.06	5	119	1	1
Jul 2014	5	0.01	1	0.05	5	143	1	1
Aug 2014	5	0.01	1	0.11	5	159	1	1
Sep 2014	5	0.01	1	0.06	5	175	1	1
Oct 2014	5	0.01	1	0.07	5	147	1	1
Nov 2014	5	0.01	1	0.23	5	170	1	1
Dec 2014	5	0.01	1	0.28	14	162	1	1
Jan 2015	5	0.01	1	0.26	5	164	1	1
Feb 2015	5	0.01	1	0.29	5	109	1	1
Mar 2015	5	0.01	1	0.25	5	115	1	1
Apr 2015	5	0.01	1	0.06	5	89.6	1	1
May 2015	5	0.01	2	0.14	5	67.1	1	1
Jun 2015	5	0.01	2	0.1	5	99.5	1	1
Jul 2015	5	0.01	1	0.05	5	123	1	1
Aug 2015	5	0.01	1	0.1	12	163	1	1
Sep 2015	5	0.01	1	0.05	5	167	1	1
Oct 2015	5	0.01	1	0.09	5	173	1	1
Nov 2015	5	0.01	1	0.05	5	176	1	1
Dec 2015	5	0.01	1	0.2	5	166	1	1
Jan 2016	5	0.01	1	0.25	5	176	1	1
Feb 2016	5	0.01	1	0.14	5	153	1	1
Mar 2016	5	0.01	1	0.21	5	125	1	1

Instream Monitoring Point STR – 2

DMR	Total Recoverable Copper	WAD Cyanide	Total Recoverable Chromium	Nitrate-Nitrogen	Total Recoverable Nickel	Total Hardness	Total Recoverable Lead	Total Recoverable Silver
	Daily Max	Daily Max	Daily Max	Daily Max	Daily Max	Daily Max	Daily Max	Daily Max
	ug/L	mg/L	ug/L	mg/L	ug/L	mg/L	ug/L	ug/L
Apr 2016	5	0.01	1	0.17	5	75	1	1
May 2016	5	0.01	1	0.06	5	113	1	1
Jun 2016	5	0.01	1	0.09	5	149	1	1
Jul 2016	5	0.01	1	0.07	5	164	1	1
Aug 2016	5	0.01	1	0.06	5	171	1	1
Sep 2016	5	0.01	1	0.05	5	176	1	1
Oct 2016	5	0.01	1	0.05	5	172	1	1
Nov 2016	5	0.01	1	0.05	5	168	1	1
Dec 2016	5	0.01	1	0.15	5	171	1	1
Jan 2017	5	0.01	1	0.19	5	170	1	1
Feb 2017	5	0.01	1	0.11	5	170	1	1
Mar 2017	5	0.01	1	0.05	5	163	1	1
Apr 2017	5	0.01	1	0.05	5	124	1	1
May 2017	5	0.01	1	0.06	5	107	1	1
Jun 2017	5	0.01	1	0.05	5	100	1	1
Jul 2017	5	0.01	1	0.05	5	147	1	1
Aug 2017	5	0.01	1	0.05	5	171	1	4
Sep 2017	5	0.01	1	0.05	5	170	1	1
Oct 2017	5	0.01	1	0.05	5	169	1	1
Nov 2017	5	0.01	1	0.05	5	161	1	1
Dec 2017	5	0.01	1	0.05	5	161	1	1
Jan 2018	5	0.01	1	0.11	5	163	1	1
Feb 2018	5	0.01	1	0.14	5	166	1	1
Mar 2018	5	0.01	1	0.18	5	155	1	1
Apr 2018	5	0.01	1	0.27	5	80.1	1	1

Instream Monitoring Point STR – 2

DMR	Total Recoverable Copper	WAD Cyanide	Total Recoverable Chromium	Nitrate-Nitrogen	Total Recoverable Nickel	Total Hardness	Total Recoverable Lead	Total Recoverable Silver
	Daily Max	Daily Max	Daily Max	Daily Max	Daily Max	Daily Max	Daily Max	Daily Max
	ug/L	mg/L	ug/L	mg/L	ug/L	mg/L	ug/L	ug/L
May 2018	5	0.01	1	0.05	5	73.5	1	1
Jun 2018	5	0.01	1	0.05	5	114	1	1
Jul 2018	5	0.01	1	0.11	5	96.3	1	1
Aug 2018	5	0.01	1	0.1	5	134	1	1
Sep 2018	5	0.01	1	0.05	5	151	1	1
Oct 2018	5	0.01	1	0.05	5	154	1	1
Nov 2018	5	0.01	1	0.14	5	142	1	1
Dec 2018	5	0.01	1	0.2	5	163	1	1
Jan 2019	5	0.01	1	0.24	5	157	1	1
Feb 2019	5	0.01	1	0.24	5	157	1	1
Mar 2019	5	0.01	1	0.28	5	165	1	1
Apr 2019	5	0.01	2	0.06	5	52.3	1	1
May 2019	5	0.01	1	0.05	5	78.3	1	1
Jun 2019	5	0.01	1	0.05	5	107	1	1
Jul 2019	5	0.01	1	0.18	5	138	1	1
Aug 2019	5	0.01	1	0.09	5	149	1	1
Sep 2019	5	0.01	1	0.05	5	172	1	1
Oct 2019	5	0.01	1	0.05	5	150	1	1
Nov 2019	5	0.01	1	0.26	5	110	1	1
Dec 2019	5	0.01	1	0.19	5	137	1	1
Jan 2020	5	0.01	1	0.2	5	159	1	1
Feb 2020	5	0.01	1	0.22	5	158	1	1
Mar 2020	5	0.01	1	0.24	5	111	1	1
Apr 2020	5	0.01	3	0.15	5	67.2	2	1
May 2020	5	0.01	1	0.06	5	71.4	1	1

Instream Monitoring Point STR – 2

DMR	Total Recoverable Copper	WAD Cyanide	Total Recoverable Chromium	Nitrate-Nitrogen	Total Recoverable Nickel	Total Hardness	Total Recoverable Lead	Total Recoverable Silver
	Daily Max	Daily Max	Daily Max	Daily Max	Daily Max	Daily Max	Daily Max	Daily Max
	ug/L	mg/L	ug/L	mg/L	ug/L	mg/L	ug/L	ug/L
Jun 2020	5	0.01	1	0.05	5	153	1	1
Jul 2020	5	0.01	1	0.25	5	148	1	1
Aug 2020	5	0.01	1	0.28	5	177	1	1
Sep 2020	5	0.01	1	0.05	5	179	1	1
Oct 2020	5	0.01	1	0.09	5	178	1	1
Nov 2020	5	0.01	1	0.05	5	186	1	1
Dec 2020	5	0.01	1	0.25	5	178	1	1
Jan 2021	5	0.01	1	0.28	5	171	1	1
Feb 2021	5	0.01	1	0.25	5	169	1	1
Mar 2021	5	0.01	1	0.21	5	168	1	1
Apr 2021	5	0.01	1	0.17	5	97.9	1	1
May 2021	5	0.01	1	0.05	5	88.9	1	1
Jun 2021	5	0.01	1	0.06	5	137	1	1
Jul 2021	5	0.01	1	0.05	5	156	1	1
Aug 2021	5	0.01	1	0.05	5	176	1	1
Sep 2021	5	0.01	1	0.05	5	174	1	1
Oct 2021	5	0.01	1	0.05	5	168	1	1
Nov 2021	5	0.01	1	0.05	5	156	1	1
Dec 2021	5	0.01	1	0.05	5	164	1	1
Jan 2022	5	0.01	1	0.16	5	163	1	1
Feb 2022	5	0.01	1	0.18	5	170	1	1
Mar 2022	5	0.01	1	0.12	5	147	1	1
Apr 2022	5	0.01	1	0.09	5	123	1	1
May 2022	5	0.01	1	0.05	5	72.3	1	1
Jun 2022	5	0.01	1	0.05	5	113	1	1

Instream Monitoring Point STR – 2

DMR	Total Recoverable Copper	WAD Cyanide	Total Recoverable Chromium	Nitrate-Nitrogen	Total Recoverable Nickel	Total Hardness	Total Recoverable Lead	Total Recoverable Silver
	Daily Max	Daily Max	Daily Max	Daily Max	Daily Max	Daily Max	Daily Max	Daily Max
	ug/L	mg/L	ug/L	mg/L	ug/L	mg/L	ug/L	ug/L
Jul 2022	5	0.01	1	0.05	5	136	1	1
Aug 2022	5	0.01	1	0.05	5	165	1	1
Sep 2022	5	0.01	1	0.05	5	182	1	1
Oct 2022	5	0.01	1	0.05	5	175	1	1
Nov 2022	5	0.01	3	0.05	5	163	1	1
Dec 2022	5	0.01	1	0.06	5	160	1	1

Instream Monitoring Point STR – 2

DMR	Total Recoverable Zinc	Total Recoverable Cadmium	Total Recoverable Selenium	Total Recoverable Mercury	Total Recoverable Arsenic	Total Recoverable Iron	Total Recoverable Aluminum	TDS
	Daily Max	Daily Max	Daily Max	Daily Max	Daily Max	Daily Max	Daily Max	Daily Max
	ug/L	ug/L	ug/L	ug/L	ug/L	ug/L	ug/L	mg/L
Jul 2005	50	1	5	0.2	5	50	27	274
Aug 2005	65	1	5	0.2	5	50	14	218
Sep 2005	50	1	5	0.2	5	88	16	210
Oct 2005	50	1	5	0.2	5	50	56	208
Nov 2005	50	1	5	0.2	5	50	12	151
Dec 2005	50	1	5	0.2	5	50	11	224
Jan 2006	50	1	5	0.2	5	50	10	211
Feb 2006	50	1	5	0.2	5	50	10	209
Mar 2006	50	1	5	0.2	5	50	12	214
Apr 2006	50	1	5	0.2	5	441	874	141
May 2006	50	1	5	0.2	5	107	133	138

Instream Monitoring Point STR – 2

DMR	Total Recoverable Zinc	Total Recoverable Cadmium	Total Recoverable Selenium	Total Recoverable Mercury	Total Recoverable Arsenic	Total Recoverable Iron	Total Recoverable Aluminum	TDS
	Daily Max	Daily Max	Daily Max	Daily Max	Daily Max	Daily Max	Daily Max	Daily Max
	ug/L	ug/L	ug/L	ug/L	ug/L	ug/L	ug/L	mg/L
Jun 2006	50	1	5	0.2	5	50	56	156
Jul 2006	50	1	5	0.2	5	50	23	189
Aug 2006	50	1	BD	BD	5	50	13	213
Sep 2006	50	1	BD	BD	5	50	15	215
Oct 2006	50	1	BD	BD	5	50	15	178
Nov 2006	50	1	BD	BD	5	50	16	185
Dec 2006	50	1	BD	BD	5	50	15	186
Jan 2007	50	1	BD	BD	5	50	15	204
Feb 2007	50	1	BD	BD	5	50	6.5	185
Mar 2007	50	1	BD	0.2	5	63	124	204
Apr 2007	50	1	BD	BD	6	525	1,000	95
May 2007	58	1	BD	BD	5	121	228	119
Jun 2007	50	1	BD	BD	5	58	89	145
Jul 2007	50	1	BD	BD	5	50	26	298
Aug 2007	50	1	BD	BD	6	50	22	206
Sep 2007	50	1	BD	BD	5	50	20	216
Oct 2007	50	1	BD	BD	5	50	10	199
Nov 2007	50	1	5	BD	5	50	14	189
Dec 2007	50	1	BD	BD	5	50	11	186
Jan 2008	50	1	BD	BD	5	50	17	210
Feb 2008	50	1	BD	BD	5	50	16	205
Mar 2008	50	1	BD	BD	5	50	13	190
Apr 2008	50	1	BD	BD	5	759	1,370	149
May 2008	51	1	BD	BD	5	530	971	89
Jun 2008	50	1	BD	BD	5	143	115	142

Instream Monitoring Point STR – 2

DMR	Total Recoverable Zinc	Total Recoverable Cadmium	Total Recoverable Selenium	Total Recoverable Mercury	Total Recoverable Arsenic	Total Recoverable Iron	Total Recoverable Aluminum	TDS
	Daily Max	Daily Max	Daily Max	Daily Max	Daily Max	Daily Max	Daily Max	Daily Max
	ug/L	ug/L	ug/L	ug/L	ug/L	ug/L	ug/L	mg/L
Jul 2008	50	1	BD	BD	5	50	23	189
Aug 2008	50	1	BD	BD	5	50	26	384
Sep 2008	50	1	BD	BD	5	50	16	200
Oct 2008	50	1	BD	BD	5	50	16	169
Nov 2008	50	1	BD	BD	5	50	45	150
Dec 2008	50	1	BD	BD	5	50	196	210
Jan 2009	50	1	BD	BD	5	50	18	194
Feb 2009	BD	BD	BD	BD	BD	BD	60	191
Mar 2009	BD	BD	BD	BD	BD	BD	59	158
Apr 2009	79	BD	BD	BD	5	570	1,010	81
May 2009	BD	BD	BD	BD	BD	258	459	84
Jun 2009	BD	BD	BD	BD	5	595	1,150	96
Jul 2009	BD	BD	BD	BD	BD	BD	39	183
Aug 2009	BD	BD	BD	BD	BD	BD	30	197
Sep 2009	BD	BD	BD	BD	BD	BD	39	198
Oct 2009	BD	BD	BD	BD	BD	BD	18	193
Nov 2009	BD	BD	BD	BD	BD	BD	55	211
Dec 2009	BD	BD	BD	BD	BD	BD	18	167
Jan 2010	BD	BD	BD	BD	BD	BD	34	221
Feb 2010	BD	BD	BD	BD	BD	BD	15	207
Mar 2010	BD	BD	BD	BD	BD	BD	35	203
Apr 2010	BD	BD	BD	BD	6	871	1,430	100
May 2010	BD	BD	BD	BD	BD	428	698	114
Jun 2010	BD	BD	BD	BD	BD	96	141	105
Jul 2010	BD	BD	BD	BD	BD	BD	41	174

Instream Monitoring Point STR – 2

DMR	Total Recoverable Zinc	Total Recoverable Cadmium	Total Recoverable Selenium	Total Recoverable Mercury	Total Recoverable Arsenic	Total Recoverable Iron	Total Recoverable Aluminum	TDS
	Daily Max	Daily Max	Daily Max	Daily Max	Daily Max	Daily Max	Daily Max	Daily Max
	ug/L	ug/L	ug/L	ug/L	ug/L	ug/L	ug/L	mg/L
Aug 2010	73	BD	BD	BD	BD	BD	30	217
Sep 2010	ND	ND	ND	ND	ND	ND	ND	ND
Oct 2010	50	1	5	0.2	5	50	31	175
Nov 2010	BD	BD	BD	BD	BD	BD	19	203
Dec 2010	BD	BD	BD	BD	BD	BD	21	178
Jan 2011	BD	BD	BD	0.2	BD	BD	22	177
Feb 2011	BD	BD	BD	BD	BD	BD	29	252
Mar 2011	BD	BD	BD	BD	BD	163	242	138
Apr 2011	BD	BD	BD	BD	BD	375	634	137
May 2011	BD	BD	BD	BD	6	670	1,100	115
Jun 2011	BD	BD	BD	BD	BD	148	198	116
Jul 2011	BD	BD	BD	BD	6	133	110	170
Aug 2011	BD	BD	BD	BD	BD	BD	27	183
Sep 2011	BD	BD	BD	BD	BD	BD	18	198
Oct 2011	BD	BD	BD	BD	BD	BD	18	207
Nov 2011	BD	BD	BD	BD	5	BD	24	323
Dec 2011	BD	BD	BD	BD	BD	BD	21	218
Jan 2012	BD	BD	BD	BD	5	BD	17	220
Feb 2012	BD	BD	BD	BD	BD	BD	16	193
Mar 2012	BD	BD	BD	BD	BD	BD	42	142
Apr 2012	BD	BD	BD	BD	BD	BD	41	169
May 2012	BD	BD	BD	BD	BD	79	121	133
Jun 2012	BD	BD	BD	BD	BD	BD	21	176
Jul 2012	BD	BD	BD	BD	BD	BD	16	193

Instream Monitoring Point STR – 2

DMR	Total Recoverable Zinc	Total Recoverable Cadmium	Total Recoverable Selenium	Total Recoverable Mercury	Total Recoverable Arsenic	Total Recoverable Iron	Total Recoverable Aluminum	TDS
	Daily Max	Daily Max	Daily Max	Daily Max	Daily Max	Daily Max	Daily Max	Daily Max
	ug/L	ug/L	ug/L	ug/L	ug/L	ug/L	ug/L	mg/L
Aug 2012	BD	BD	BD	BD	BD	56	20	231
Sep 2012	BD	BD	BD	BD	BD	BD	13	194
Oct 2012	BD	BD	BD	BD	BD	BD	BD	269
Nov 2012	BD	BD	BD	BD	BD	BD	16	206
Dec 2012	BD	BD	BD	BD	BD	BD	BD	187
Jan 2013	BD	BD	BD	BD	BD	BD	BD	176
Feb 2013	BD	BD	BD	BD	BD	BD	BD	183
Mar 2013	BD	BD	BD	BD	BD	BD	11	214
Apr 2013	BD	BD	BD	BD	BD	BD	16	159
May 2013	BD	BD	BD	BD	BD	94	136	106
Jun 2013	BD	BD	BD	BD	BD	89	136	128
Jul 2013	BD	BD	BD	BD	BD	BD	18	161
Aug 2013	50	1	5	0.2	5	50	29	184
Sep 2013	50	1	5	0.2	5	50	10	191
Oct 2013	50	1	5	0.2	5	668	1,060	132
Nov 2013	50	1	5	0.2	5	141	234	126
Dec 2013	50	1	5	0.2	5	50	22	141
Jan 2014	50	1	5	0.2	5	50	16	146
Feb 2014	50	1	5	0.2	5	50	12	250
Mar 2014	50	1	5	0.2	5	107	174	133
Apr 2014	50	1	5	0.2	5	926	1,140	116
May 2014	50	1	5	0.2	5	127	256	98
Jun 2014	50	1	5	0.2	5	50	48	122
Jul 2014	50	1	5	0.2	5	50	24	159
Aug 2014	50	1	5	0.2	5	50	17	173

Instream Monitoring Point STR – 2

DMR	Total Recoverable Zinc	Total Recoverable Cadmium	Total Recoverable Selenium	Total Recoverable Mercury	Total Recoverable Arsenic	Total Recoverable Iron	Total Recoverable Aluminum	TDS
	Daily Max	Daily Max	Daily Max	Daily Max	Daily Max	Daily Max	Daily Max	Daily Max
	ug/L	ug/L	ug/L	ug/L	ug/L	ug/L	ug/L	mg/L
Sep 2014	50	1	5	0.2	5	50	12	177
Oct 2014	50	1	5	0.2	5	50	10	159
Nov 2014	50	1	5	0.2	5	50	10	193
Dec 2014	50	1	5	0.2	5	50	12	170
Jan 2015	50	1	5	0.2	5	50	10	178
Feb 2015	50	1	5	0.2	5	478	816	125
Mar 2015	50	1	5	0.2	5	213	377	135
Apr 2015	50	1	5	0.2	5	306	607	111
May 2015	50	1	5	0.2	5	1,060	1,950	106
Jun 2015	50	1	5	0.2	5	300	482	114
Jul 2015	50	1	5	0.2	5	54	87	145
Aug 2015	50	1	5	0.2	5	125	37	170
Sep 2015	52	1	5	0.2	5	50	20	169
Oct 2015	50	1	5	0.2	5	50	11	177
Nov 2015	50	1	5	0.2	5	50	13	170
Dec 2015	50	1	5	0.2	5	50	10	177
Jan 2016	50	1	5	0.2	5	149	135	182
Feb 2016	50	1	5	0.2	5	50	41	178
Mar 2016	50	1	5	0.2	5	228	419	148
Apr 2016	65	1	5	0.2	5	377	773	92
May 2016	91	1	5	0.2	5	86	150	122
Jun 2016	50	1	5	0.2	5	50	25	171
Jul 2016	50	1	5	0.2	5	50	17	171
Aug 2016	50	1	5	0.2	5	50	15	192
Sep 2016	50	1	5	0.2	5	50	14	191

Instream Monitoring Point STR – 2

DMR	Total Recoverable Zinc	Total Recoverable Cadmium	Total Recoverable Selenium	Total Recoverable Mercury	Total Recoverable Arsenic	Total Recoverable Iron	Total Recoverable Aluminum	TDS
	Daily Max	Daily Max	Daily Max	Daily Max	Daily Max	Daily Max	Daily Max	Daily Max
	ug/L	ug/L	ug/L	ug/L	ug/L	ug/L	ug/L	mg/L
Oct 2016	50	1	5	0.2	5	50	13	196
Nov 2016	50	1	5	0.2	5	50	12	210
Dec 2016	50	1	5	0.2	5	50	10	179
Jan 2017	50	1	5	0.2	5	50	10	192
Feb 2017	50	1	5	0.2	5	50	16	182
Mar 2017	50	1	5	0.2	5	50	10	153
Apr 2017	50	1	5	0.2	5	50	26	144
May 2017	50	1	5	0.2	5	116	152	129
Jun 2017	50	1	5	0.2	5	116	309	114
Jul 2017	50	1	5	0.2	5	50	27	156
Aug 2017	50	1	5	0.2	5	50	39	182
Sep 2017	50	1	5	0.2	6	50	23	198
Oct 2017	51	1	5	0.2	5	50	16	198
Nov 2017	50	1	5	0.2	5	50	19	191
Dec 2017	50	1	5	0.2	5	50	16	188
Jan 2018	50	1	5	0.2	5	50	12	156
Feb 2018	50	1	5	0.2	5	50	11	188
Mar 2018	50	1	5	0.2	5	50	13	168
Apr 2018	50	1	5	0.2	7	781	1,630	117
May 2018	112	1	5	0.2	8	375	623	96
Jun 2018	50	1	5	0.2	5	92	112	147
Jul 2018	50	1	5	0.2	5	503	859	137
Aug 2018	50	1	5	0.2	5	50	40	170
Sep 2018	50	1	5	0.2	5	50	33	187
Oct 2018	50	1	5	0.2	5	50	20	179

Instream Monitoring Point STR – 2

DMR	Total Recoverable Zinc	Total Recoverable Cadmium	Total Recoverable Selenium	Total Recoverable Mercury	Total Recoverable Arsenic	Total Recoverable Iron	Total Recoverable Aluminum	TDS
	Daily Max	Daily Max	Daily Max	Daily Max	Daily Max	Daily Max	Daily Max	Daily Max
	ug/L	ug/L	ug/L	ug/L	ug/L	ug/L	ug/L	mg/L
Nov 2018	50	1	5	0.2	5	50	12	164
Dec 2018	50	1	5	0.2	5	50	17	191
Jan 2019	50	1	5	0.2	5	50	18	158
Feb 2019	50	1	5	0.2	5	50	25	197
Mar 2019	50	1	5	0.2	5	50	10	180
Apr 2019	50	1	5	0.2	5	933	1,210	69
May 2019	50	1	5	0.2	5	288	487	106
Jun 2019	50	1	5	0.2	5	118	175	139
Jul 2019	50	1	5	0.2	5	77	81	164
Aug 2019	50	1	5	0.2	5	69	113	170
Sep 2019	50	1	5	0.2	5	50	26	179
Oct 2019	50	1	5	0.2	5	50	27	168
Nov 2019	50	1	5	0.2	5	537	897	145
Dec 2019	50	1	5	0.2	5	50	63	113
Jan 2020	50	1	5	0.2	5	50	22	157
Feb 2020	50	1	5	0.2	5	50	19	165
Mar 2020	50	1	5	0.2	5	509	896	148
Apr 2020	50	1	5	0.2	8	1,560	2,700	105
May 2020	50	1	5	0.2	6	577	914	79
Jun 2020	50	1	5	0.2	5	72	81	135
Jul 2020	50	1	5	0.2	5	110	106	162
Aug 2020	50	1	5	0.2	5	50	50	177
Sep 2020	50	1	5	0.2	5	50	30	155
Oct 2020	50	1	5	0.2	5	50	14	178
Nov 2020	50	1	5	0.2	5	50	14	229

Instream Monitoring Point STR – 2

DMR	Total Recoverable Zinc	Total Recoverable Cadmium	Total Recoverable Selenium	Total Recoverable Mercury	Total Recoverable Arsenic	Total Recoverable Iron	Total Recoverable Aluminum	TDS
	Daily Max	Daily Max	Daily Max	Daily Max	Daily Max	Daily Max	Daily Max	Daily Max
	ug/L	ug/L	ug/L	ug/L	ug/L	ug/L	ug/L	mg/L
Dec 2020	50	1	5	0.2	5	50	13	146
Jan 2021	50	1	5	0.2	5	50	16	182
Feb 2021	50	1	5	0.2	5	50	10	182
Mar 2021	50	1	5	0.2	5	50	12	176
Apr 2021	50	1	5	0.2	5	235	378	101
May 2021	50	1	5	0.2	5	146	231	116
Jun 2021	50	1	5	0.2	5	69	64	125
Jul 2021	50	1	5	0.2	6	50	31	175
Aug 2021	50	1	5	0.2	6	50	30	162
Sep 2021	50	1	5	0.2	5	50	12	189
Oct 2021	50	1	5	0.2	5	50	24	177
Nov 2021	50	1	5	0.2	5	50	18	154
Dec 2021	50	1	5	0.2	5	50	12	155
Jan 2022	50	1	5	0.2	5	50	21	164
Feb 2022	50	1	5	0.2	5	50	10	166
Mar 2022	50	1	5	0.2	5	50	13	133
Apr 2022	50	1	5	0.2	5	50	38	121
May 2022	50	1	5	0.2	5	253	417	91
Jun 2022	50	1	5	0.2	5	57	72	110
Jul 2022	50	1	5	0.2	5	50	19	124
Aug 2022	50	1	5	0.2	5	50	13	177
Sep 2022	50	1	5	0.2	5	50	20	174
Oct 2022	50	1	5	0.2	5	50	16	162
Nov 2022	50	1	5	0.2	5	50	11	180
Dec 2022	50	1	5	0.2	5	50	21	162

ATTACHMENT 2

Reasonable Potential Analysis

Reasonable Potential Methods:

The following reasonable potential analyses were completed to determine if parameters found in LAC Minerals' effluent have reasonable potential to violate the SDSWQS. SDDANR's reasonable potential analysis methodology is documented in *Reasonable Potential Implementation Procedure for SWD Permits* (2013).

Compliance Point 001 will not allow a mixing zone due to the fact that it is an instream sample. For Compliance Point 004, mixing will not be allowed due to the fact that the discharge from Compliance Point 004 becomes the headworks of Rubicon Gulch and will not have any receiving waters to mix with. Instream Monitoring Points STR1 and STR2 will not allow for mixing as it is an instream sample and will already be representative of the segment of the stream.

[1] The coefficient of variation where n>10 is calculated as standard deviation/mean. When n<10, the coefficient of variation is estimated to be 0.6.

[2] The multiplying factor is computed in accordance with EPA's reasonable potential determination, page 6, SDDANR's *Reasonable Potential Implementation Procedure for SWD Permits, April 2013.* The DO minimum values are divided by the multiplying factor.

[3] The maximum observed effluent concentration is multiplied by the multiplying factor to determine the highest effluent concentration which can reasonably be expected, based on the observed data, a 99% confidence level, and a 95% probability basis.

Compliance Point 001 Acute Reasonable Potential Analyses

Statistics	Arsenic	Chromium	TSS	WAD Cyanide	Cadmium	Copper	Lead
	µg/L	µg/L	mg/L	µg/L	µg/L	µg/L	µg/L
Number of Samples (n)	112	113	111	111	114	113	111
Mean	7.55	1.02	10.00	10.00	1.14	5.38	1.00
Variance	730.32	0.02	0.00	0.00	0.81	2.74	0.00
Standard Deviation	27.02	0.13	0.00	0.00	0.90	1.65	0.00
Minimum	5.00	1.00	10.00	10.00	1.00	5.00	1.00
Maximum	291.00	2.00	10.00	10.00	10.00	16.00	1.00
Coefficient of Variation[1]	3.58	0.13	0.00	0.00	0.79	0.31	0.00
Multiplying factor [2]	0.62	0.96	1.00	1.00	0.81	0.91	1.00
Calculations & Decisions							
Highest RP Concentration [3]	181.37	1.92	10.00	10.00	8.12	14.64	1.00
SDSWQ Standard	340.00	16.00	53.00	22.00	4.26	27.79	147.86
Is there RP to violate?	No, OK	No, OK	No, OK	No, OK	Yes, RP	No, OK	No, OK
Is the Highest RP > 50% of SDSWQS?	Yes, so Monitor	No, so Reduce	No, so Reduce	No, so Reduce	Yes, so Monitor	Yes, so Monitor	No, so Reduce
Current Acute Limit	None	None	158.00	22.00	100.00	300.00	600.00
Proposed Acute Limit	None	None	None	None	Hardness Based	None	None
Current Monitoring Frequency	Biweekly / Monthly	Biweekly / Monthly	Biweekly / Monthly	Biweekly / Monthly	Biweekly / Monthly	Biweekly / Monthly	Biweekly / Monthly
Proposed Monitoring Frequency	Monthly	None	Monthly	None	Biweekly / Monthly	Biweekly / Monthly	Monthly
Limit & Monitoring Justification	Reasonable Potential Analysis	Reasonable Potential Analysis	Pollutant Of Concern	Ceased Mining	Reasonable Potential	Reasonable Potential Analysis	Pollutant Of Concern

Statistics	Mercury	Selenium	Zinc	TDS	Sulfate	Nickel	Silver
	µg/L	µg/L	µg/L	mg/L	mg/L	µg/L	µg/L
Number of Samples (n)	111	109	112	130	108	124	111
Mean	0.20	5.00	50.20	377.46	216.97	7.49	1.00
Variance	0.00	0.00	19.96	5502.34	2709.84	55.93	0.00
Standard Deviation	0.00	0.00	4.47	74.18	52.06	7.48	0.00
Minimum	0.20	5.00	17.00	180.00	19.10	5.00	1.00
Maximum	0.20	5.00	79.00	590.00	363.00	57.00	1.00
Coefficient of Variation[1]	0.00	0.00	0.09	0.20	0.24	1.00	0.00
Multiplying factor [2]	1.00	1.00	0.97	0.93	0.94	0.76	1.00
Calculations & Decisions							
Highest RP Concentration [3]	0.20	5.00	76.98	550.65	340.03	43.15	1.00
SDSWQ Standard	1.40	12.82	225.20	1750.00	875.00	898.98	12.12
Is there RP to violate?	No, OK	No, OK	No, OK	No, OK	No, OK	No, OK	No, OK
Is the Highest RP > 50% of SDSWQS?	No, so Reduce	No, so Reduce	No, so Reduce	No, so Reduce	No, so Reduce	No, so Reduce	No, so Reduce
Current Acute Limit	2.00	12.80	1500.00	None	None	None	None
Proposed Acute Limit	None	None	None	None	None	None	None
Current Monitoring Frequency	Biweekly / Monthly	Biweekly / Monthly	Biweekly / Monthly	Monthly	Quarterly	Biweekly / Monthly	Biweekly / Monthly
Proposed Monitoring Frequency	Monthly	Monthly	Monthly	Monthly	Quarterly	Monthly	None
Limit & Monitoring Justification	Pollutant Of Concern	Reasonable Potential Analysis	Pollutant Of Concern	Reasonable Potential Analysis	Reasonable Potential Analysis	Reasonable Potential Analysis	Reasonable Potential Analysis

Compliance Point 001 Chronic Reasonable Potential Analyses

Statistics	Arsenic	Chromium	TSS	WAD Cyanide	Cadmium	Copper	Lead
	µg/L	µg/L	mg/L	µg/L	µg/L	µg/L	µg/L
Number of Samples (n)	1	7	0	0	7	11	0
Mean	285.33	0.64	#DIV/0!	#DIV/0!	2.71	4.76	#DIV/0!
Variance	#DIV/0!	0.07	#DIV/0!	#DIV/0!	10.99	16.03	#DIV/0!
Standard Deviation	#DIV/0!	0.26	#DIV/0!	#DIV/0!	3.31	4.00	#DIV/0!
Minimum	285.33	0.33	0.00	0.00	0.50	2.00	0.00
Maximum	285.33	1.00	0.00	0.00	10.00	16.00	0.00
Coefficient of Variation [1]	0.60	0.60	0.60	0.60	0.60	0.84	0.60
Multiplying factor [2]	6.20	2.01	#DIV/0!	#DIV/0!	2.01	1.98	#DIV/0!
Calculations & Decisions							
Highest RP Concentration [3]	#VALUE!	2.01	#DIV/0!	#VALUE!	20.05	31.68	#DIV/0!
SDSWQ Standard	150.00	11.00	30.00	5.20	0.42	17.31	5.76
Is there RP to violate SDSWQ?	#VALUE!	No, OK	#DIV/0!	#VALUE!	Yes, RP	Yes, RP	#DIV/0!
Is the Highest RP > 50% of SDSWQS?	#VALUE!	No, so Reduce	#DIV/0!	#VALUE!	Yes, so Monitor	Yes, so Monitor	#DIV/0!
Current Chronic Limit	None	None	90.00	None	50.00	150.00	300.00
Proposed Chronic Limit	None	None	None	None	Hardness Based	None	None
Current Monitoring Frequency	Biweekly / Monthly	Biweekly / Monthly	Biweekly / Monthly	Biweekly / Monthly	Biweekly / Monthly	Biweekly / Monthly	Biweekly / Monthly
Proposed Monitoring Frequency	Monthly	None	Monthly	None	Biweekly / Monthly	Biweekly / Monthly	Monthly
Limit & Monitoring Justification	Reasonable Potential Analysis	Reasonable Potential Analysis	Pollutant Of Concern	Ceased Mining	Reasonable Potential	Reasonable Potential Analysis	Pollutant Of Concern

Statistics	Mercury	Selenium	Zinc	TDS	Sulfate	Nickel
	µg/L	µg/L	µg/L	mg/L	mg/L	mg/L
Number of Samples (n)	0	127	6	130	108	58
Mean	#DIV/0!	0.00	24.58	375.56	215.54	7.64
Variance	#DIV/0!	0.00	37.72	5480.52	2705.04	60.05
Standard Deviation	#DIV/0!	0.00	6.14	74.03	52.01	7.75
Minimum	0.00	0.00	17.00	180.00	18.93	1.67
Maximum	0.00	0.00	33.00	590.00	363.00	57.00
Coefficient of Variation [1]	0.60	#DIV/0!	0.60	0.20	0.24	1.01
Multiplying factor [2]	#DIV/0!	#DIV/0!	2.14	0.93	0.94	1.00
Calculations & Decisions						
Highest RP Concentration [3]	#VALUE!	#DIV/0!	70.68	550.54	339.91	57.16
SDSWQ Standard	0.77	5.00	225.20	1000.00	500.00	99.85
Is there RP to violate SDSWQ?	#VALUE!	#DIV/0!	No, OK	No, OK	No, OK	No, OK
Is the Highest RP > 50% of SDSWQS?	#VALUE!	#DIV/0!	No, so Reduce	Yes, so Monitor	Yes, so Monitor	Yes, so Monitor
Current Chronic Limit	1.00	4.60	750.00	None	None	None
Proposed Chronic Limit	None	None	None	None	None	None
Current Monitoring Frequency	Biweekly / Monthly	Biweekly / Monthly	Biweekly / Monthly	Monthly	Quarterly	Biweekly / Monthly
Proposed Monitoring Frequency	Monthly	Monthly	Monthly	Monthly	Quarterly	Monthly
Limit & Monitoring Justification	Pollutant Of Concern	Reasonable Potential Analysis	Pollutant Of Concern	Reasonable Potential Analysis	Reasonable Potential Analysis	Reasonable Potential Analysis

Compliance Point 004 Acute Reasonable Potential Analyses

Statistics	Arsenic	Cadmium	Chromium	Copper	WAD Cyanide	Lead	Mercury
	µg/L	µg/L	µg/L	µg/L	µg/L	µg/L	µg/L
Number of Samples (n)	112	111	111	114	111	112	111
Mean	11.38	1.00	1.06	5.12	10.00	1.02	0.20
Variance	48.74	0.00	0.33	0.34	0.00	0.02	0.00
Standard Deviation	6.98	0.00	0.58	0.58	0.00	0.13	0.01
Minimum	5.00	1.00	1.00	5.00	10.00	1.00	0.20
Maximum	37.00	1.00	7.00	9.00	10.00	2.00	0.30
Coefficient of Variation[1]	0.61	0.00	0.54	0.11	0.00	0.13	0.05
Multiplying factor [2]	0.85	1.00	0.86	0.97	1.00	0.96	0.99
Calculations & Decisions							
Highest RP Concentration [3]	31.38	1.00	6.05	8.70	10.00	1.93	0.30
SDSWQ Standard	340.00	6.00	16.00	38.74	22.00	214.09	1.40
Is there RP to violate?	No, OK	No, OK	No, OK	No, OK	No, OK	No, OK	No, OK
Is the Highest RP > 50% of SDSWQS?	No, so Reduce	No, so Reduce	No, so Reduce	No, so Reduce	No, so Reduce	No, so Reduce	No, so Reduce
Current Acute Limit	340.00	Hardness Based	16.00	Hardness Based	22.00	Hardness Based	1.40
Proposed Acute Limit	None	None	16.00	None	None	None	None
Current Monitoring Frequency	Biweekly / Monthly	Biweekly / Monthly	Biweekly / Monthly	Biweekly / Monthly	Biweekly / Monthly	Biweekly / Monthly	Biweekly / Monthly
Proposed Monitoring Frequency	None	None	Monthly	Monthly	Monthly	Monthly	Monthly
Limit & Monitoring Justification	Reasonable Potential Analysis	Reasonable Potential Analysis	Reasonable Potential	Pollutant Of Concern	Best Professional Judgement	Pollutant Of Concern	Pollutant Of Concern

Statistics	Selenium	TDS	TSS	Zinc	Nickel	Silver	DO
	µg/L	mg/L	mg/L	µg/L	µg/L	µg/L	mg/L
Number of Samples (n)	112	130	112	113	127	111	130
Mean	5.27	904.12	13.03	50.42	23.02	1.02	8.51
Variance	0.43	249835.30	789.00	4.01	135.59	0.04	2.03
Standard Deviation	0.66	499.84	28.09	2.00	11.64	0.19	1.43
Minimum	5.00	165.00	10.00	50.00	5.00	1.00	4.88
Maximum	8.00	2090.00	307.00	64.00	59.00	3.00	12.93
Coefficient of Variation[1]	0.12	0.55	2.16	0.04	0.51	0.19	0.17
Multiplying factor [2]	0.96	0.83	0.68	0.99	0.85	0.95	0.94
Calculations & Decisions							
Highest RP Concentration [3]	7.72	1740.29	209.11	63.25	50.04	2.84	5.18
SDSWQ Standard	12.82	4375.00	53.00	303.62	1211.43	22.22	7.00
Is there RP to violate?	No, OK	No, OK	Yes, RP	No, OK	No, OK	No, OK	Yes, RP
Is the Highest RP > 50% of SDSWQS?	Yes, so Monitor	No, so Reduce	Yes, so Monitor	No, so Reduce	No, so Reduce	No, so Reduce	Yes, so Monitor
Current Acute Limit	12.82	None	158.00	Hardness Based	Hardness Based	Hardness Based	None
Proposed Acute Limit	12.82	None	53.00	None	None	None	None
Current Monitoring Frequency	Biweekly / Monthly	Monthly	Biweekly / Monthly	Biweekly / Monthly	Biweekly / Monthly	Biweekly / Monthly	Monthly
Proposed Monitoring Frequency	Biweekly / Monthly	Monthly	Biweekly / Monthly	Monthly	None	None	Biweekly / Monthly
Limit & Monitoring Justification	Reasonable Potential Analysis	Reasonable Potential Analysis	Reasonable Potential	Pollutant Of Concern	Reasonable Potential Analysis	Reasonable Potential Analysis	Best Professional Judgement

Compliance Point 004 Chronic Reasonable Potential Analyses

Statistics	Arsenic	Cadmium	Chromium	Copper	WAD Cyanide	Lead	Mercury
	µg/L	µg/L	µg/L	µg/L	µg/L	µg/L	µg/L
Number of Samples (n)	95	1	7	10	0	4	1
Mean	10.22	0.30	0.95	2.89	#DIV/0!	0.67	0.01
Variance	33.71	#DIV/0!	1.31	0.90	#DIV/0!	0.06	#DIV/0!
Standard Deviation	5.81	#DIV/0!	1.15	0.95	#DIV/0!	0.24	#DIV/0!
Minimum	2.00	0.30	0.33	1.67	0.00	0.50	0.01
Maximum	30.00	0.30	3.50	4.50	0.00	1.00	0.01
Coefficient of Variation [1]	0.57	0.60	0.60	0.33	0.60	0.60	0.60
Multiplying factor [2]	0.89	6.20	2.01	1.38	#DIV/0!	2.59	6.20
Calculations & Decisions							
Highest RP Concentration [3]	26.69	1.86	7.02	6.19	#DIV/0!	2.59	0.06
SDSWQ Standard	150.00	0.54	11.00	23.89	5.20	8.34	0.77
Is there RP to violate SDSWQ?	No, OK	Yes, RP	No, OK	No, OK	#DIV/0!	No, OK	No, OK
Is the Highest RP > 50% of SDSWQS?	No, so Reduce	Yes, so Monitor	Yes, so Monitor	No, so Reduce	#DIV/0!	No, so Reduce	No, so Reduce
Current Chronic Limit	150.00	Hardness Based	11.00	Hardness Based	None	Hardness Based	0.01
Proposed Chronic Limit	None	None	11.00	None	None	None	None
Current Monitoring Frequency	Biweekly / Monthly	Biweekly / Monthly	Biweekly / Monthly	Biweekly / Monthly	Biweekly / Monthly	Biweekly / Monthly	Biweekly / Monthly
Proposed Monitoring Frequency	None	None	Monthly	Monthly	Monthly	Monthly	Monthly
Limit & Monitoring Justification	Reasonable Potential Analysis	Reasonable Potential Analysis	Reasonable Potential	Pollutant Of Concern	Best Professional Judgement	Pollutant Of Concern	Pollutant Of Concern

Statistics	Nitrate	Selenium	TDS	TSS	Zinc	Nickel
	mg/L	µg/L	mg/L	mg/L	µg/L	µg/L
Number of Samples (n)	124	128	130	8	6	126
Mean	0.77	0.58	879.61	16.38	30.19	20.09
Variance	0.17	1.49	235388.17	603.79	160.20	104.80
Standard Deviation	0.41	1.22	485.17	24.57	12.66	10.24
Minimum	0.06	0.00	165.00	3.30	19.33	2.50
Maximum	2.17	4.00	2090.00	76.80	54.00	46.00
Coefficient of Variation [1]	0.54	2.11	0.55	0.60	0.60	0.51
Multiplying factor [2]	0.85	0.64	0.83	1.90	2.14	0.85
Calculations & Decisions						
Highest RP Concentration [3]	1.83	2.54	1740.93	145.77	115.65	39.04
SDSWQ Standard	50.00	5.00	2500.00	30.00	303.62	134.55
Is there RP to violate SDSWQ?	No, OK	No, OK	No, OK	Yes, RP	No, OK	No, OK
Is the Highest RP > 50% of SDSWQS?	No, so Reduce	Yes, so Monitor	Yes, so Monitor	Yes, so Monitor	No, so Reduce	No, so Reduce
Current Chronic Limit	None	4.60	None	90.00	Hardness Based	Hardness Based
Proposed Chronic Limit	None	5.00	2500.00	30.00	None	None
Current Monitoring Frequency	Monthly	Biweekly / Monthly	Monthly	Biweekly / Monthly	Biweekly / Monthly	Biweekly / Monthly
Proposed Monitoring Frequency	None	Biweekly / Monthly	Monthly	Biweekly / Monthly	Monthly	None
Limit & Monitoring Justification	Reasonable Potential Analysis	Reasonable Potential Analysis	Reasonable Potential Analysis	Reasonable Potential	Pollutant Of Concern	Reasonable Potential Analysis

Instream Monitoring Point STR1 Acute Reasonable Potential Analyses

Statistics	Arsenic	Cadmium	Chromium	Copper	WAD Cyanide	Lead	Mercury
	µg/L	µg/L	µg/L	µg/L	µg/L	µg/L	µg/L
Number of Samples (n)	119	111	114	112	111	111	111
Mean	5.68	1.00	1.23	5.04	10.00	1.14	0.20
Variance	1.74	0.00	0.64	0.08	0.00	0.23	0.00
Standard Deviation	1.32	0.00	0.80	0.28	0.00	0.48	0.00
Minimum	5.00	1.00	1.00	5.00	10.00	1.00	0.20
Maximum	11.00	1.00	7.00	7.00	10.00	4.00	0.20
Coefficient of Variation[1]	0.23	0.00	0.65	0.06	0.00	0.42	0.00
Multiplying factor [2]	0.93	1.00	0.84	0.98	1.00	0.89	1.00
Calculations & Decisions							
Highest RP Concentration [3]	10.23	1.00	5.86	6.89	10.00	3.56	0.20
SDSWQ Standard	340.00	0.96	16.00	6.58	22.00	28.05	1.40
Is there RP to violate?	No, OK	Yes, RP	No, OK	Yes, RP	No, OK	No, OK	No, OK
Is the Highest RP > 50% of SDSWQS?	No, so Reduce	Yes, so Monitor	No, so Reduce	Yes, so Monitor	No, so Reduce	No, so Reduce	No, so Reduce
Current Acute Limit	N/A	N/A	N/A	N/A	N/A	N/A	N/A
Proposed Acute Limit	N/A	N/A	N/A	N/A	N/A	N/A	N/A
Current Monitoring Frequency	Monthly	Monthly	Monthly	Monthly	Monthly	Monthly	Monthly
Proposed Monitoring Frequency	Monthly	Monthly	Monthly	Monthly	None	Monthly	None
Limit & Monitoring Justification	Professional Judgement	Reasonable Potential	Reasonable Potential Analysis	Reasonable Potential	Ceased Mining	Reasonable Potential	Reasonable Potential Analysis

Statistics	Nickel	Nitrate	Selenium	Silver	TDS	TSS	Zinc
	µg/L	mg/L	µg/L	µg/L	mg/L	mg/L	µg/L
Number of Samples (n)	113	130	112	111	130	111	111
Mean	5.29	0.69	5.08	1.01	115.01	10.00	51.49
Variance	2.33	3.14	0.47	0.01	2816.97	0.00	116.11
Standard Deviation	1.53	1.77	0.69	0.09	53.08	0.00	10.78
Minimum	5.00	0.13	5.00	1.00	26.00	10.00	50.00
Maximum	18.00	18.40	12.00	2.00	527.00	10.00	161.00
Coefficient of Variation[1]	0.29	2.57	0.14	0.09	0.46	0.00	0.21
Multiplying factor [2]	0.92	0.60	0.96	0.97	0.86	1.00	0.94
Calculations & Decisions							
Highest RP Concentration [3]	16.56	11.10	11.54	1.95	450.97	10.00	151.68
SDSWQ Standard	246.67	10.00	12.82	0.87	1750.00	53.00	61.67
Is there RP to violate?	No, OK	Yes, RP	No, OK	Yes, RP	No, OK	No, OK	Yes, RP
Is the Highest RP > 50% of SDSWQS?	No, so Reduce	Yes, so Monitor	Yes, so Monitor	Yes, so Monitor	No, so Reduce	No, so Reduce	Yes, so Monitor
Current Acute Limit	N/A	N/A	N/A	N/A	N/A	N/A	N/A
Proposed Acute Limit	N/A	N/A	N/A	N/A	N/A	N/A	N/A
Current Monitoring Frequency	Monthly	Monthly	Monthly	Monthly	Monthly	Monthly	Monthly
Proposed Monitoring Frequency	Monthly	Monthly	Monthly	Monthly	Monthly	None	Monthly
Limit & Monitoring Justification	Reasonable Potential Analysis	Reasonable Potential	Reasonable Potential	Reasonable Potential	Professional Judgement	Reasonable Potential Analysis	Reasonable Potential

Instream Monitoring Point STR1 Chronic Reasonable Potential Analyses

Statistics	**Arsenic**	**Cadmium**	**Chromium**	**Copper**	**WAD Cyanide**	**Lead**	**Mercury**
	µg/L	**µg/L**	**µg/L**	**µg/L**	**µg/L**	**µg/L**	**µg/L**
Number of Samples (n)	119	111	114	112	111	111	111
Mean	5.68	1.00	1.23	5.04	10.00	1.14	0.20
Variance	1.74	0.00	0.64	0.08	0.00	0.23	0.00
Standard Deviation	1.32	0.00	0.80	0.28	0.00	0.48	0.00
Minimum	5.00	1.00	1.00	5.00	10.00	1.00	0.20
Maximum	11.00	1.00	7.00	7.00	10.00	4.00	0.20
Coefficient of Variation[1]	0.23	0.00	0.65	0.06	0.00	0.42	0.00
Multiplying factor [2]	0.93	1.00	0.84	0.98	1.00	0.89	1.00
Calculations & Decisions							
Highest RP Concentration [3]	10.23	1.00	5.86	6.89	10.00	3.56	0.20
SDSWQ Standard	150.00	0.15	11.00	4.71	5.20	1.10	0.77
Is there RP to violate?	No, OK	Yes, RP	No, OK	Yes, RP	Yes, RP	Yes, RP	No, OK
Is the Highest RP > 50% of SDSWQS?	No, so Reduce	Yes, so Monitor	Yes, so Monitor	Yes, so Monitor	Yes, so Monitor	Yes, so Monitor	No, so Reduce
Current Acute Limit	N/A	N/A	N/A	N/A	N/A	N/A	N/A
Proposed Acute Limit	N/A	N/A	N/A	N/A	N/A	N/A	N/A
Current Monitoring Frequency	Monthly	Monthly	Monthly	Monthly	Monthly	Monthly	Monthly
Proposed Monitoring Frequency	Monthly	Monthly	Monthly	Monthly	None	Monthly	None
Limit & Monitoring Justification	Professional Judgement	Reasonable Potential	Reasonable Potential Analysis	Reasonable Potential	Ceased Mining	Reasonable Potential	Reasonable Potential Analysis

Statistics	Nickel	Nitrate	Selenium	Silver	TDS	TSS	Zinc
	µg/L	mg/L	µg/L	µg/L	mg/L	mg/L	µg/L
Number of Samples (n)	113	130	112	111	130	111	111
Mean	5.29	0.69	5.08	1.01	115.01	10.00	51.49
Variance	2.33	3.14	0.47	0.01	2816.97	0.00	116.11
Standard Deviation	1.53	1.77	0.69	0.09	53.08	0.00	10.78
Minimum	5.00	0.13	5.00	1.00	26.00	10.00	50.00
Maximum	18.00	18.40	12.00	2.00	527.00	10.00	161.00
Coefficient of Variation[1]	0.29	2.57	0.14	0.09	0.46	0.00	0.21
Multiplying factor [2]	0.92	0.60	0.96	0.97	0.86	1.00	0.94
Calculations & Decisions							
Highest RP Concentration [3]	16.56	11.10	11.54	1.95	450.97	10.00	151.68
SDSWQ Standard	27.53	50.00	5.00	0.88	1000.00	30.00	61.96
Is there RP to violate?	No, OK	No, OK	Yes, RP	Yes, RP	No, OK	No, OK	Yes, RP
Is the Highest RP > 50% of SDSWQS?	Yes, so Monitor	No, so Reduce	Yes, so Monitor	Yes, so Monitor	No, so Reduce	No, so Reduce	Yes, so Monitor
Current Acute Limit	N/A	N/A	N/A	N/A	N/A	N/A	N/A
Proposed Acute Limit	N/A	N/A	N/A	N/A	N/A	N/A	N/A
Current Monitoring Frequency	Monthly	Monthly	Monthly	Monthly	Monthly	Monthly	Monthly
Proposed Monitoring Frequency	Monthly	Monthly	Monthly	Monthly	Monthly	None	Monthly
Limit & Monitoring Justification	Reasonable Potential Analysis	Reasonable Potential	Reasonable Potential	Reasonable Potential	Professional Judgement	Reasonable Potential Analysis	Reasonable Potential

Instream Monitoring Point STR2 Acute Reasonable Potential Analyses

Statistics	Arsenic	Cadmium	Chromium	Copper	WAD Cyanide	Lead	Mercury
	µg/L	µg/L	µg/L	µg/L	µg/L	µg/L	µg/L
Number of Samples (n)	113	112	113	112	112	112	112
Mean	5.11	1.00	1.06	5.00	10.00	1.01	0.20
Variance	0.22	0.00	0.09	0.00	0.00	0.01	0.00
Standard Deviation	0.47	0.00	0.31	0.00	0.00	0.09	0.00
Minimum	5.00	1.00	1.00	5.00	10.00	1.00	0.20
Maximum	8.00	1.00	3.00	5.00	10.00	2.00	0.20
Coefficient of Variation[1]	0.09	0.00	0.29	0.00	0.00	0.09	0.00
Multiplying factor [2]	0.97	1.00	0.92	1.00	1.00	0.97	1.00
Calculations & Decisions							
Highest RP Concentration [3]	7.79	1.00	2.76	5.00	10.00	1.95	0.20
SDSWQ Standard	340.00	2.15	16.00	14.32	22.00	69.51	1.40
Is there RP to violate?	No, OK	No, OK	No, OK	No, OK	No, OK	No, OK	No, OK
Is the Highest RP > 50% of SDSWQS?	No, so Reduce	No, so Reduce	No, so Reduce	No, so Reduce	No, so Reduce	No, so Reduce	No, so Reduce
Current Acute Limit	N/A	N/A	N/A	N/A	N/A	N/A	N/A
Proposed Acute Limit	N/A	N/A	N/A	N/A	N/A	N/A	N/A
Current Monitoring Frequency	Monthly	Monthly	Monthly	Monthly	Monthly	Monthly	Monthly
Proposed Monitoring Frequency	None	Monthly	None	Monthly	None	Monthly	None
Limit & Monitoring Justification	Reasonable Potential Analysis	Reasonable Potential	Reasonable Potential Analysis	Reasonable Potential Analysis	Ceased Mining	Reasonable Potential Analysis	Reasonable Potential Analysis

Statistics	Nickel	Nitrate	Selenium	Silver	TDS	TSS	Zinc
	µg/L	mg/L	µg/L	µg/L	mg/L	mg/L	µg/L
Number of Samples (n)	113	124	112	112	131	112	112
Mean	5.15	0.17	5.00	1.03	160.05	10.00	51.08
Variance	1.15	0.11	0.00	0.08	1189.77	0.00	50.67
Standard Deviation	1.07	0.33	0.00	0.28	34.49	0.00	7.12
Minimum	5.00	0.05	5.00	1.00	69.00	10.00	50.00
Maximum	14.00	2.90	5.00	4.00	269.00	10.00	112.00
Coefficient of Variation[1]	0.21	1.93	0.00	0.28	0.22	0.00	0.14
Multiplying factor [2]	0.94	0.66	1.00	0.92	0.93	1.00	0.96
Calculations & Decisions							
Highest RP Concentration [3]	13.17	1.91	5.00	3.70	249.26	10.00	107.56
SDSWQ Standard	495.82	10.00	12.82	3.61	1750.00	53.00	124.09
Is there RP to violate?	No, OK	No, OK	No, OK	Yes, RP	No, OK	No, OK	No, OK
Is the Highest RP > 50% of SDSWQS?	No, so Reduce	No, so Reduce	No, so Reduce	Yes, so Monitor	No, so Reduce	No, so Reduce	Yes, so Monitor
Current Acute Limit	N/A	N/A	N/A	N/A	N/A	N/A	N/A
Proposed Acute Limit	N/A	N/A	N/A	N/A	N/A	N/A	N/A
Current Monitoring Frequency	Monthly	Monthly	Monthly	Monthly	Monthly	Monthly	Monthly
Proposed Monitoring Frequency	None	None	Monthly	Monthly	None	None	Monthly
Limit & Monitoring Justification	Reasonable Potential Analysis	Reasonable Potential Analysis	Reasonable Potential Analysis	Reasonable Potential	Reasonable Potential Analysis	Reasonable Potential Analysis	Reasonable Potential Analysis

Instream Monitoring Point STR2 Chronic Reasonable Potential Analyses

Statistics	**Arsenic**	**Cadmium**	**Chromium**	**Copper**	**WAD Cyanide**	**Lead**	**Mercury**
	µg/L	**µg/L**	**µg/L**	**µg/L**	**µg/L**	**µg/L**	**µg/L**
Number of Samples (n)	113	112	113	112	112	112	112
Mean	5.11	1.00	1.06	5.00	10.00	1.01	0.20
Variance	0.22	0.00	0.09	0.00	0.00	0.01	0.00
Standard Deviation	0.47	0.00	0.31	0.00	0.00	0.09	0.00
Minimum	5.00	1.00	1.00	5.00	10.00	1.00	0.20
Maximum	8.00	1.00	3.00	5.00	10.00	2.00	0.20
Coefficient of Variation[1]	0.09	0.00	0.29	0.00	0.00	0.09	0.00
Multiplying factor [2]	0.97	1.00	0.92	1.00	1.00	0.97	1.00
Calculations & Decisions							
Highest RP Concentration [3]	7.79	1.00	2.76	5.00	10.00	1.95	0.20
SDSWQ Standard	150.00	0.26	11.00	9.79	5.20	2.82	0.77
Is there RP to violate?	No, OK	Yes, RP	No, OK	No, OK	Yes, RP	No, OK	No, OK
Is the Highest RP > 50% of SDSWQS?	No, so Reduce	Yes, so Monitor	No, so Reduce	Yes, so Monitor	Yes, so Monitor	Yes, so Monitor	No, so Reduce
Current Acute Limit	N/A	N/A	N/A	N/A	N/A	N/A	N/A
Proposed Acute Limit	N/A	N/A	N/A	N/A	N/A	N/A	N/A
Current Monitoring Frequency	Monthly	Monthly	Monthly	Monthly	Monthly	Monthly	Monthly
Proposed Monitoring Frequency	None	Monthly	None	Monthly	None	Monthly	None
Limit & Monitoring Justification	Reasonable Potential Analysis	Reasonable Potential	Reasonable Potential Analysis	Reasonable Potential Analysis	Ceased Mining	Reasonable Potential Analysis	Reasonable Potential Analysis

Statistics	Nickel	Nitrate	Selenium	Silver	TDS	TSS	Zinc
	µg/L	mg/L	µg/L	µg/L	mg/L	mg/L	µg/L
Number of Samples (n)	113	124	112	112	131	112	112
Mean	5.15	0.17	5.00	1.03	160.05	10.00	51.08
Variance	1.15	0.11	0.00	0.08	1189.77	0.00	50.67
Standard Deviation	1.07	0.33	0.00	0.28	34.49	0.00	7.12
Minimum	5.00	0.05	5.00	1.00	69.00	10.00	50.00
Maximum	14.00	2.90	5.00	4.00	269.00	10.00	112.00
Coefficient of Variation[1]	0.21	1.93	0.00	0.28	0.22	0.00	0.14
Multiplying factor [2]	0.94	0.66	1.00	0.92	0.93	1.00	0.96
Calculations & Decisions							
Highest RP Concentration [3]	13.17	1.91	5.00	3.70	249.26	10.00	107.56
SDSWQ Standard	56.81	10.00	5.00	3.85	1000.00	30.00	128.01
Is there RP to violate?	No, OK	No, OK	No, OK	No, OK	No, OK	No, OK	No, OK
Is the Highest RP > 50% of SDSWQS?	No, so Reduce	No, so Reduce	Yes, so Monitor	Yes, so Monitor	No, so Reduce	No, so Reduce	Yes, so Monitor
Current Acute Limit	N/A	N/A	N/A	N/A	N/A	N/A	N/A
Proposed Acute Limit	N/A	N/A	N/A	N/A	N/A	N/A	N/A
Current Monitoring Frequency	Monthly	Monthly	Monthly	Monthly	Monthly	Monthly	Monthly
Proposed Monitoring Frequency	None	None	Monthly	Monthly	None	None	Monthly
Limit & Monitoring Justification	Reasonable Potential Analysis	Reasonable Potential Analysis	Reasonable Potential Analysis	Reasonable Potential	Reasonable Potential Analysis	Reasonable Potential Analysis	Reasonable Potential Analysis

ATTACHMENT 3

Antidegradation Review

Permit Type: **Major Industrial- Renewal** Applicant: **LAC Minerals**
Date Received: **November 24, 2009** Permit #: **SD0026883**
County: **Lawrence** Legal Description: **Sections 14, 15, 22, and 23, T5N, R2E**
Receiving Stream: **Spruce Gulch** Classification: **9, 10**
Rubicon Gulch **3, 8, 9, 10**
If the discharge affects a downstream waterbody with a higher use classification, list its name and uses: **Spruce Gulch – Cleopatra Creek (2, 7, 8, 9, 10) -> Spearfish Creek (1, 2, 7, 8, 9, 10, 11)**
Rubicon Gulch (3, 8, 9, 10) – Spearfish Creek (2, 8, 9, 10)

APPLICABILITY

1. Is the permit or the stream segment exempt from the antidegradation review process under ARSD 74:51:01? Yes ☐ No ☒ If no, go to question #2. If yes, check those reasons why the review is not required:

   ☐ Existing facility covered under a surface water discharge permit is operating at or below design flows and pollutant loadings;
   ☐ Existing effluent quality from a surface water discharge permitted facility is in compliance with all discharge permit limits;
   ☐ Existing surface water discharge permittee was discharging to the current stream segment prior to March 27, 1973, and the quality and quantity of the discharge has not degraded the water quality of that segment as it existed on March 27, 1973;
   ☐ The existing surface water discharge permittee, with DANR approval, has upgraded or built new wastewater treatment facilities between March 27, 1973, and July 1, 1988;
   ☐ The existing surface water discharge permittee discharges to a receiving water assigned only the beneficial uses of (9) and (10); the discharge is not expected to contain toxic pollutants in concentrations that may cause an impact to the receiving stream; and DANR has documented that the stream cannot attain a higher use classification. This exemption does not apply to discharges that may cause impacts to downstream segments that are of higher quality;
   ☐ Receiving water meets Tier 1 waters criteria. Any permitted discharge must meet water quality standards;
   ☐ The permitted discharge will be authorized by a Section 404 Corps of Engineers Permit, will undergo a similar review process in the issuance of that permit, and will be issued a 401 certification by the department, indicating compliance with the state's antidegradation provisions; or
   ☐ Other: _____

No further review required.

FORMAL REVIEW

2. Is the stream segment classified as an OSRW? Yes ☐ No ☒ If no, go to question #3. **If yes, no change in water quality allowed. No further review required.**

3. Will there be an insignificant change in water quality? Yes ☒ No ☐ If no, go to question #4. **If yes, no further review required. List reason why discharge is insignificant**

   ☐ Only temporary change in water quality will result from the discharge;
   ☐ Resulting change in water quality from the discharge will only affect a water quality parameter that is only regulated by a narrative standard and the discharge will not adversely impact the stream's beneficial uses;
   ☐ Volume of the proposed discharge is small compared to the flow in the stream. The ratio of the average stream flow to discharge flow is greater than 50:1;
   ☐ The increase in pollutant loading at critical low flow is expected to be less than 20% of the stream's assimilative capacity;
   ☐ The resulting change in water quality from the discharge is less than one standard deviation of the mean concentration of the ambient water quality; or
   ☒ Other: **This permit does not authorize an increase in effluent limits for any parameter except Selenium and ensures the protection of downstream uses. The current permit allows a detection/reporting level of 5 µg/L for selenium, in effect giving the permittee a compliance level of 5 µg/L, despite the effluent limit of 4.6 µg/L. The draft permit requires the permittee to use sufficiently sensitive methods and no longer authorizes a reporting level of 5 µg/L for Selenium.**

4. Are existing, regulated point or nonpoint sources located in the area in compliance with required controls or has a compliance schedule been established for these sources? Yes ☐ No ☐ If no, establish an appropriate compliance schedule prior to approving, as proposed, the activity under review.

5. Based on available information, are there existing uses that are better than the currently designated uses? Yes ☐ No ☐ If yes, use protection of the higher existing use(s) as the basis for antidegradation decision-making and arrange to upgrade the currently designated use(s).

6. Will existing uses be fully maintained and protected? Yes ☐ No ☐ If no, recommend denial of the activity as proposed.

PERMIT APPLICATION

7. Has the applicant submitted all information listed in the antidegradation implementation Procedure? Yes ☒ No ☐ If no, why not? **The facility has submitted the**

information necessary for SDDANR to make a determination about the water quality for the proposed discharge. If the permit is contested, the facility will be required to submit the documentation of the economic need and cost-benefit ratio of the discharge.

PUBLIC NOTICE AND OPPORTUNITY FOR HEARING

8. Has the application been properly public noticed? Yes ☐ No ☐ Date notice occurred
   In paper: _____ Paper notice appeared in: _____

9. Has anyone petitioned the department for a public hearing on the application? Yes ☐ No ☐
   If no, no further review required. Proceed with writing permit based on outcome of antidegradation review. If yes, schedule time before the Water Management Board for public hearing on application.
   Date and time of hearing: _____
   Location of hearing: _____

10. Did the Board of Water Management approve the application? Yes ☐ No ☐ Attach a copy of the board minutes to this worksheet.

ANTIDEGRADATION REVIEW SUMMARY

11. The outcome of the review is:
    - ☐ A formal antidegradation review was not required for reasons stated in this worksheet. Any permitted discharge must ensure water quality standards will not be violated.
    - ☒ The review has determined that degradation of water quality should not be allowed. Any permitted discharge would have to meet effluent limits or conditions that would not result in any degradation estimated through appropriate modeling techniques based on ambient water quality in the receiving stream, or pursue an alternative to discharging to the waterbody.
    - ☐ The review has determined that the discharge will cause an insignificant change in water quality in the receiving stream. The appropriate agency may proceed with permit issuance with the appropriate conditions to ensure water quality standards are met.
    - ☐ The review has determined, with public input, that the permitted discharge is allowed to discharge effluent at concentrations determined through a total maximum daily load (TMDL). The TMDL will determine the appropriate effluent limits based on the upstream ambient water quality and the water quality standard(s) of the receiving stream.
    - ☐ The review has determined that the discharge is allowed. However, the full assimilative capacity of the receiving stream cannot be used in developing the permit effluent limits or conditions. In this case, a TMDL must be completed based on the upstream ambient water quality and the assimilative capacity allowed by the antidegradation review.
    - ☐ Other: _____
      _____
      _____
      _____

12. Describe any other requirements to implement antidegradation or any special conditions That are required as a result of this antidegradation review: _____

_____
_____
_____
_____
_____

Tom Anderson	July 19, 2023
Reviewer	Date
Jeanne Goodman, PE	July 19, 2023
Program Supervisor or Team Leader	Date

ATTACHMENT 4

Spruce Gulch Water Treatment Flow Schematic

Spruce Gulch Water Treatment
(Compliance Point 001)

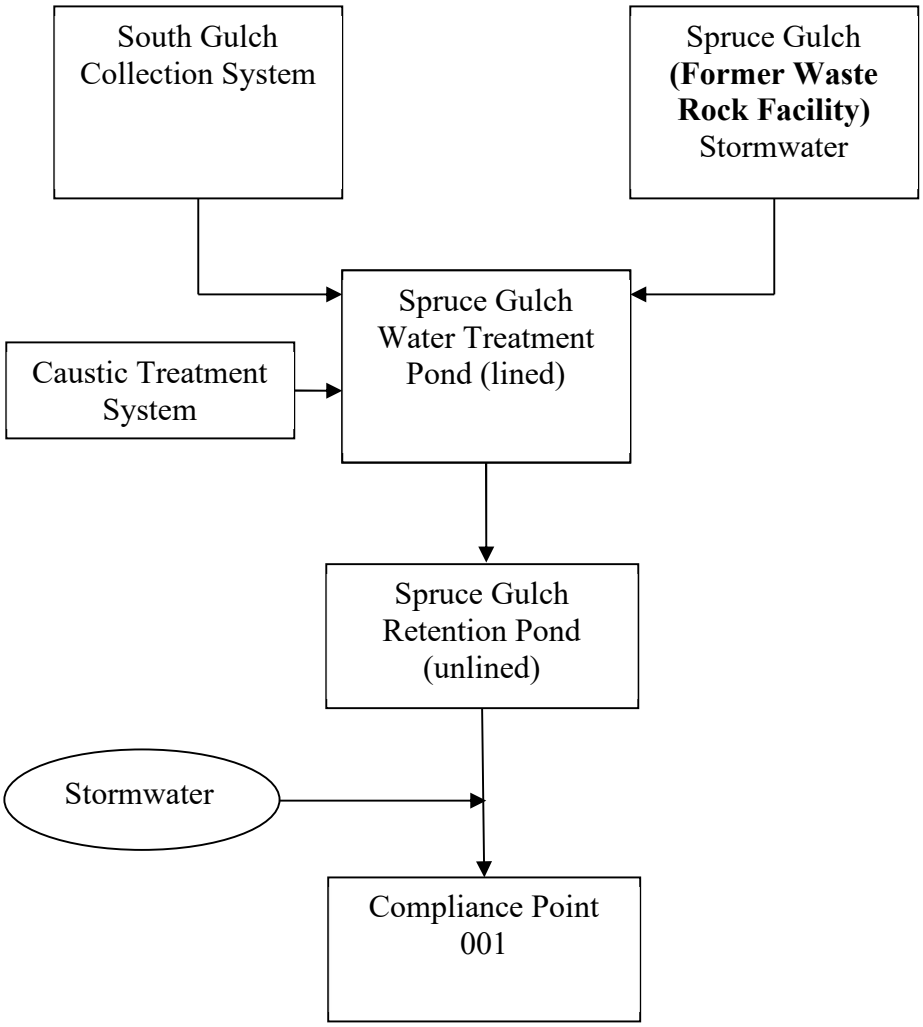

ATTACHMENT 5

Richmond Hill Water Treatment Flow Schematics

Richmond Hill Mine Water Treatment Line Drawing
Compliance Point 004
Treatment System Scenario 1

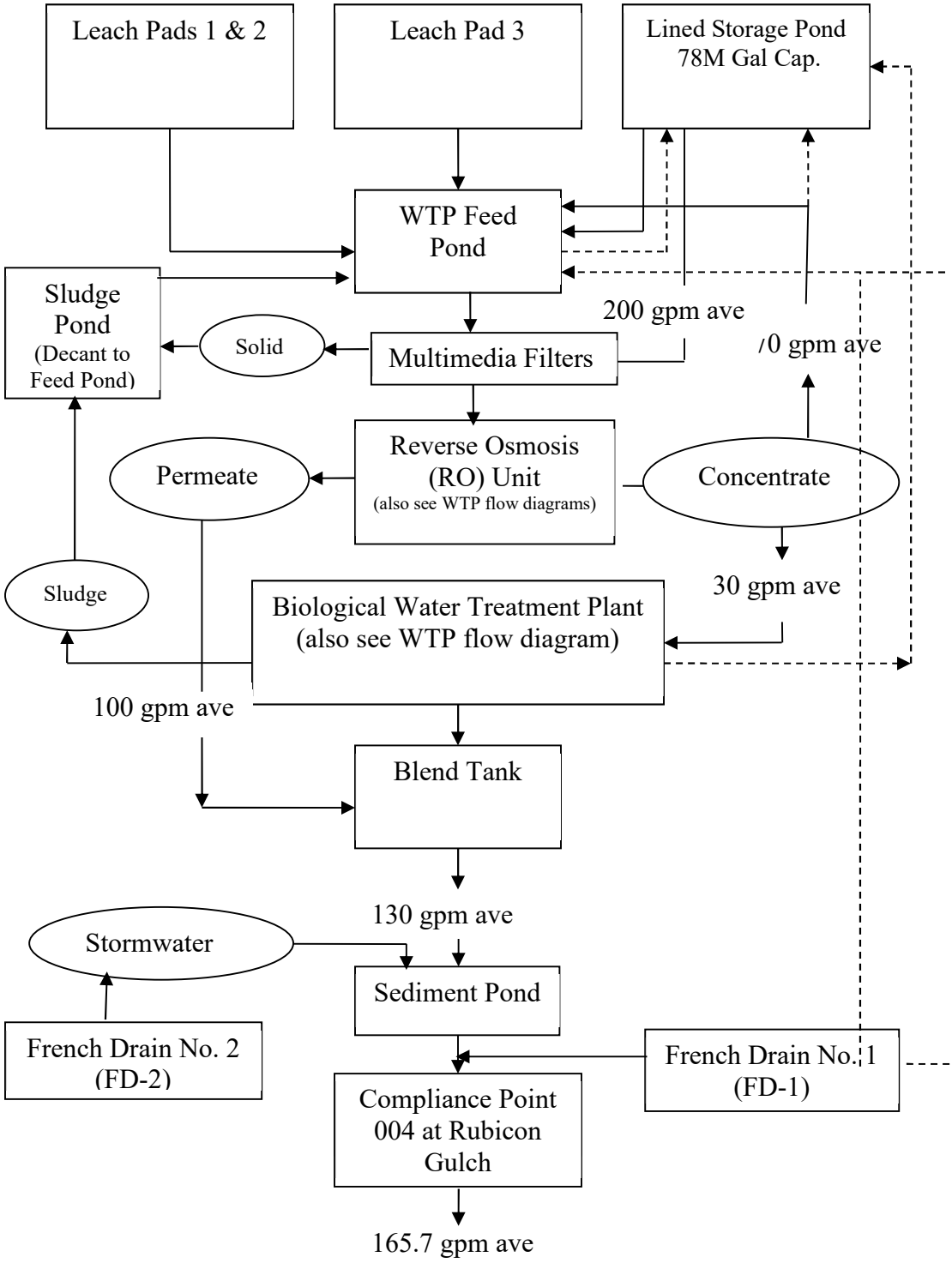

Richmond Hill Mine Water Treatment Line Drawing
Compliance Point 004
Treatment System Scenario 2

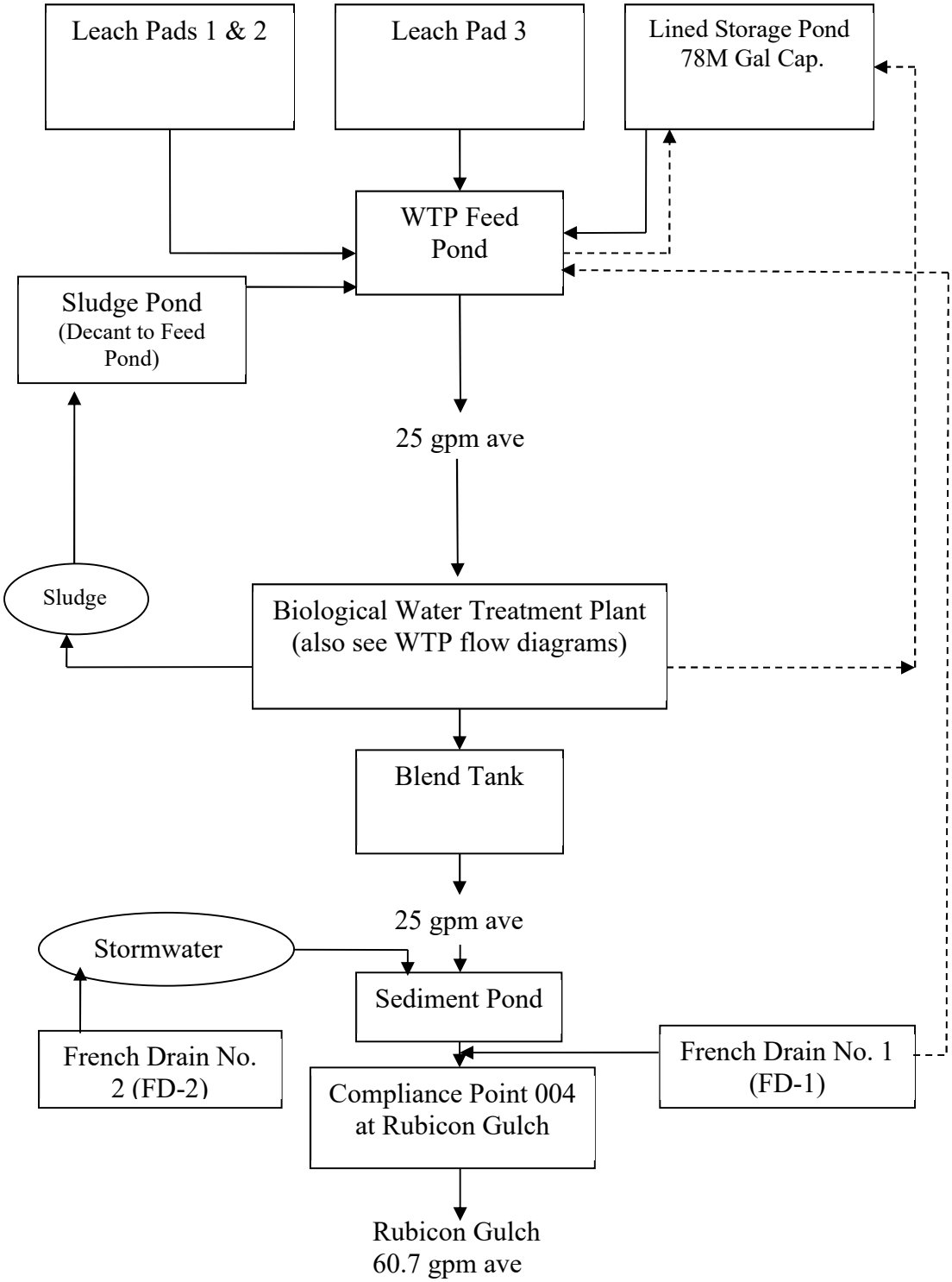

Richmond Hill Mine Water Treatment Line Drawing
Compliance Point 004
Treatment System Scenario 3

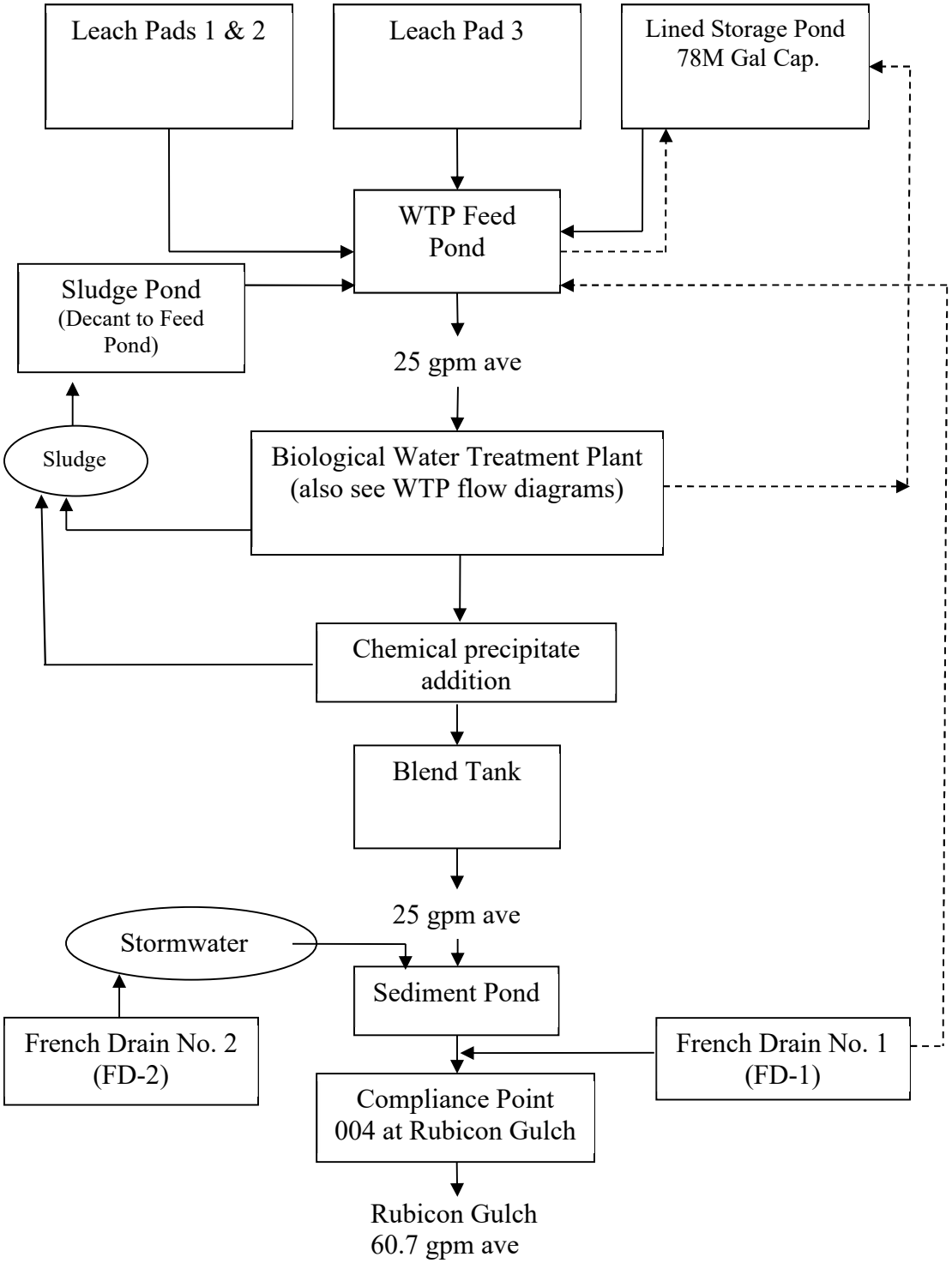

ATTACHMENT 6

Richmond Hill Water Treatment Flow Diagrams

Richmond Hill Mine Water Treatment Flow Diagram
Compliance Point 004
Treatment System Scenario 1

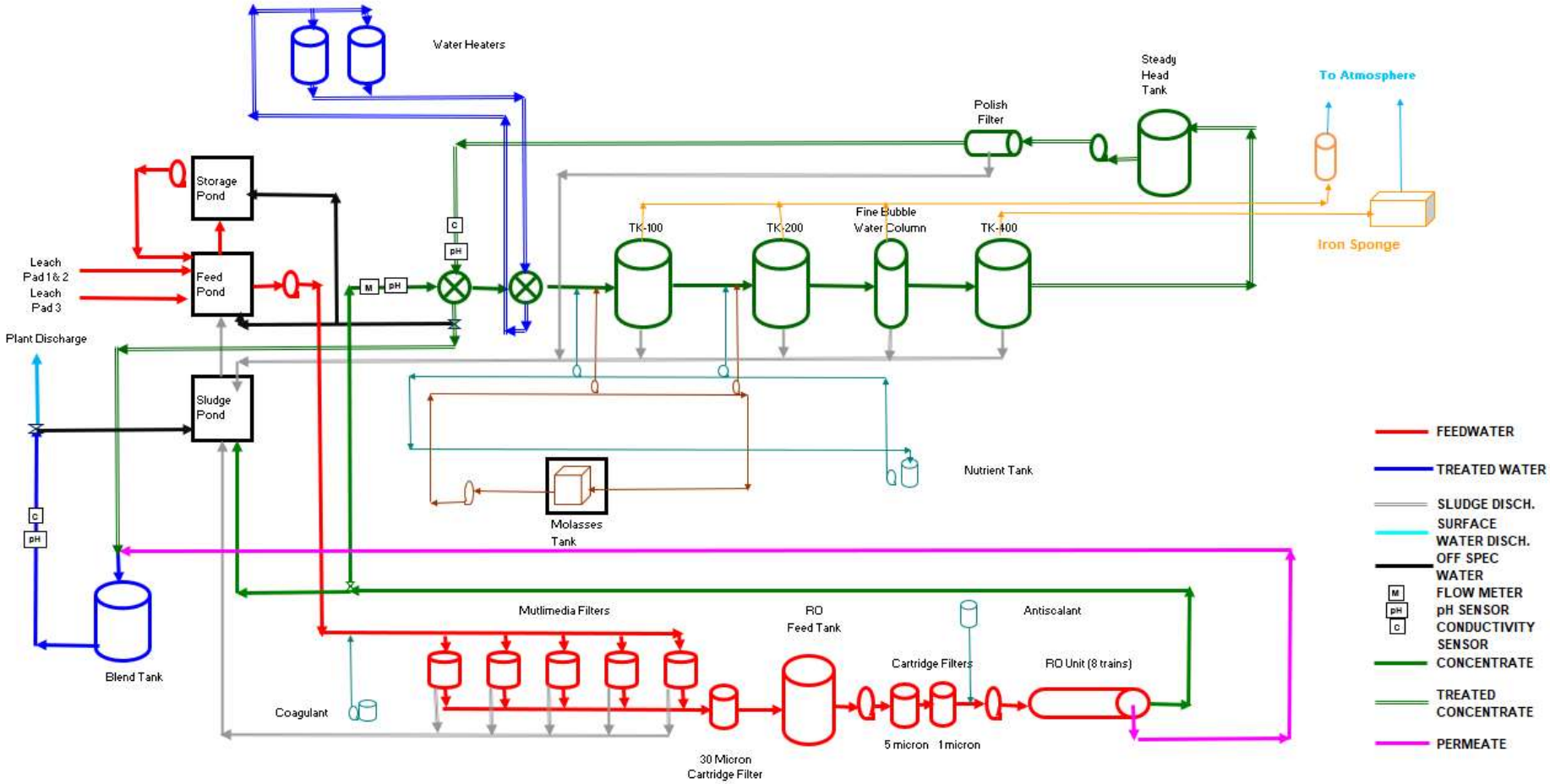

Richmond Hill Mine Water Treatment Flow Diagram
Compliance Point 004
Treatment System Scenario 2

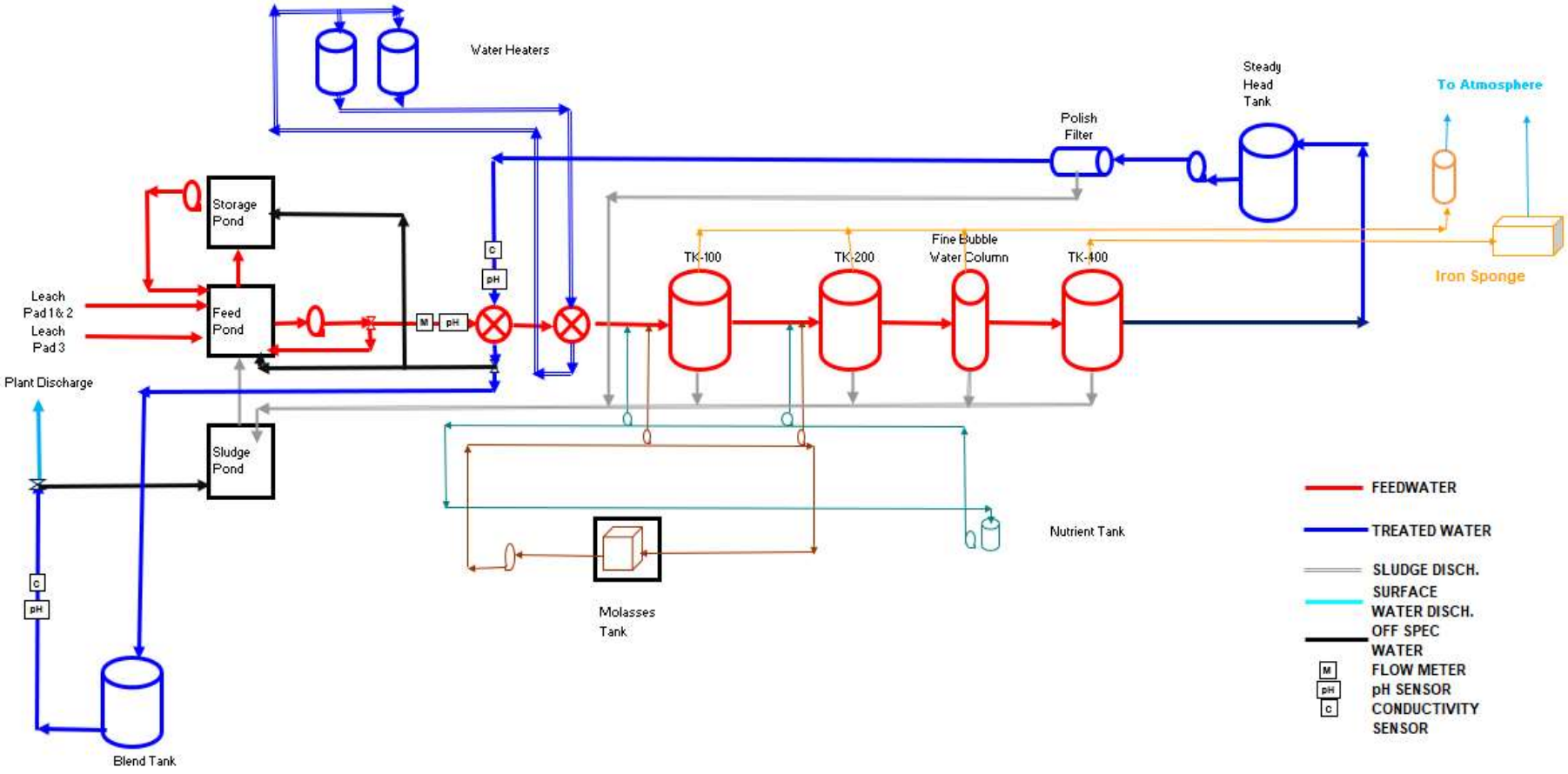
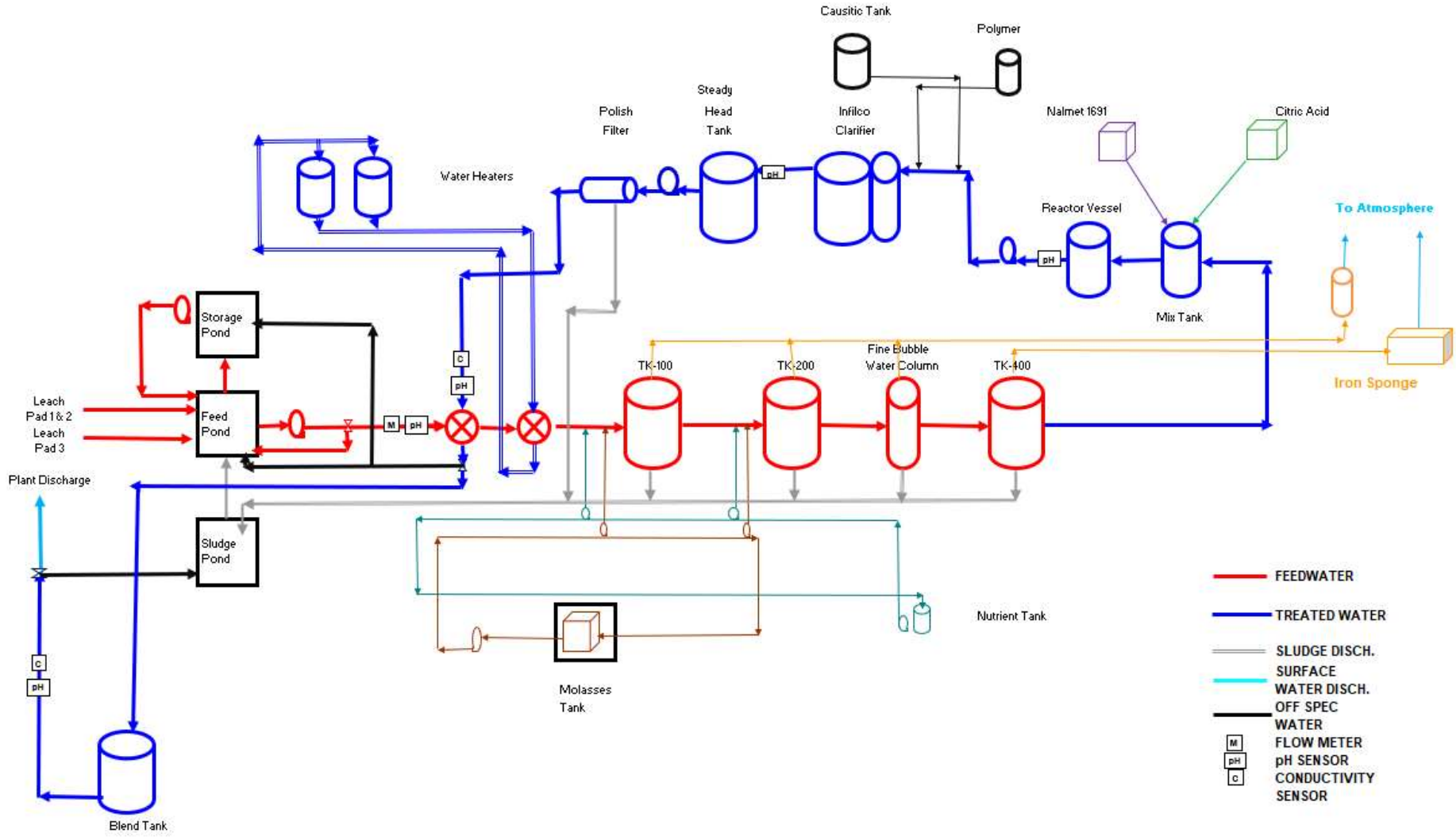
Richmond Hill Mine Water Treatment Flow Diagram
Compliance Point 004
Treatment System Scenario 3